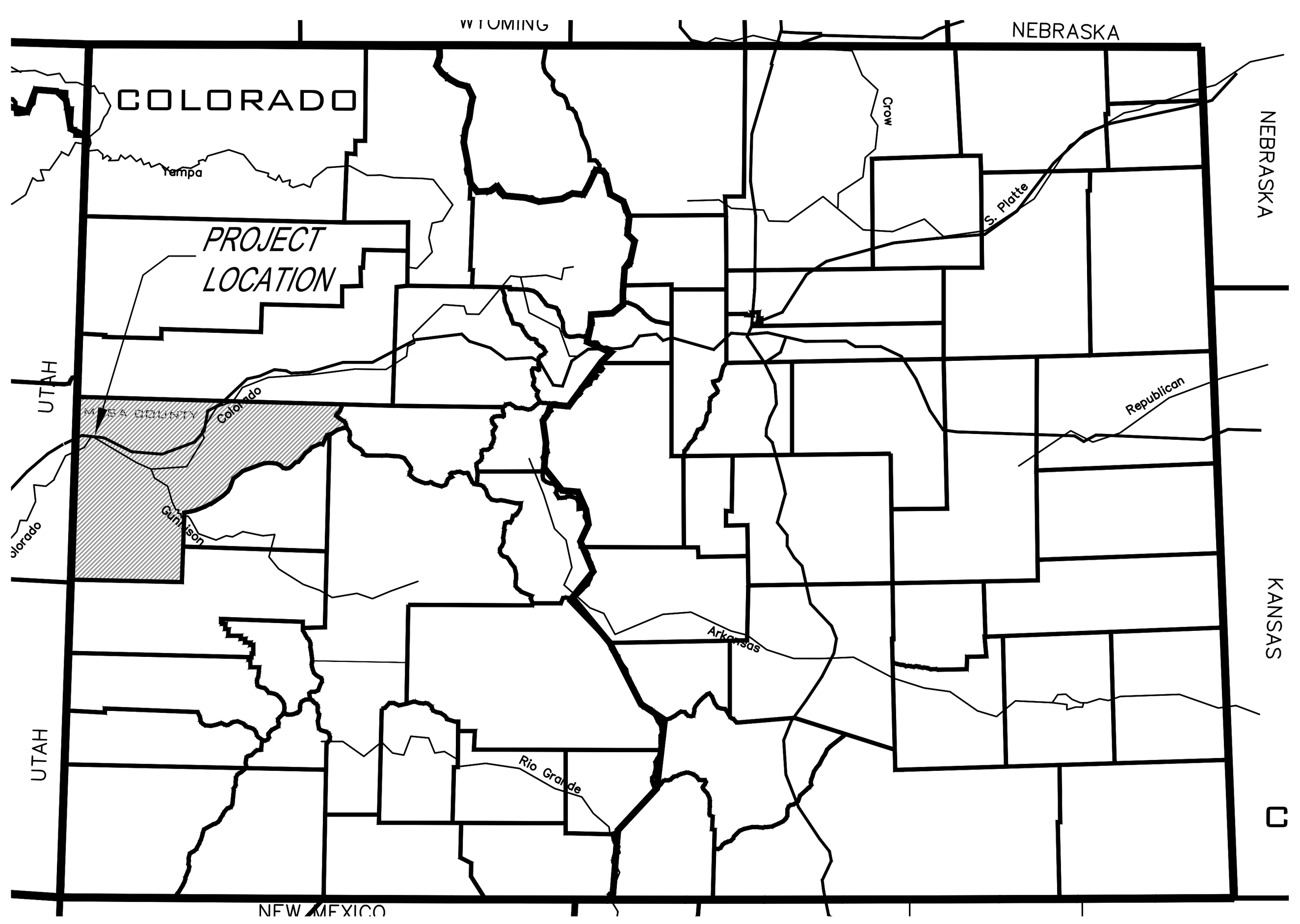

Mesa County Colorado
N.T.S.

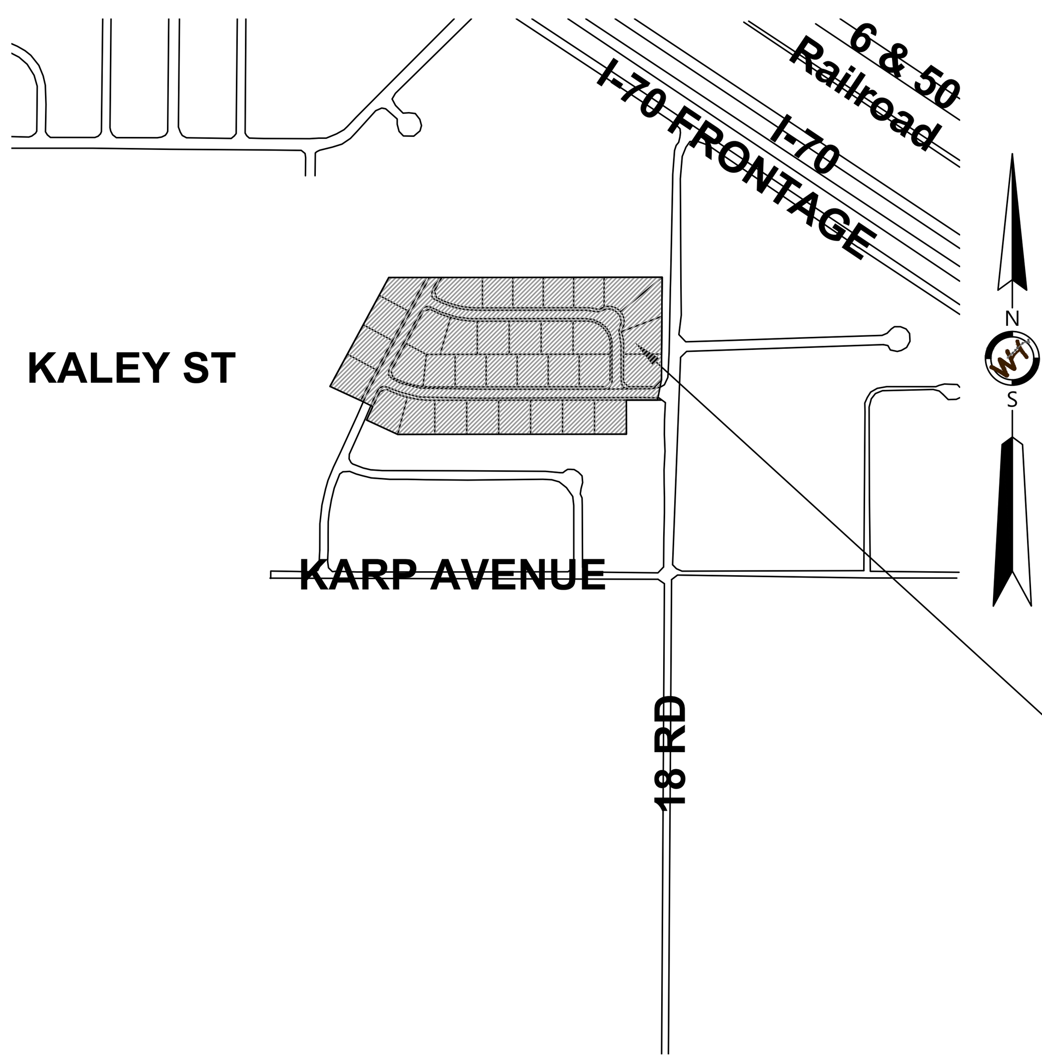

VICINITY MAP
Mesa County, Colorado
1 IN=500 FT

ACCEPTED FOR CONSTRUCTION FOR ONE YEAR FROM THIS DATE.
Acceptance of these plans does not relieve the developer, contractor, or the engineer from conformance
with the City of Fruita Standard Specifications for Road and Bridge Construction.

____
City of Fruita Engineering Division Representative Date

ACCEPTED AS CONSTRUCTED

____
City of Fruita Engineering Division Representative Date

NOTE:

ALIGNMENTS CAN BE STRAIGHTENED TO REDUCE AMOUNT OF ELBOWS, AT THE DIRECTION OF THE OWNER, AND GUIDANCE BY CIVIL ENGINEER. WHCE MUST APPROVE MAJOR REALIGNMENTS OR OTHER MODIFICATIONS.
BASED ON SURVEY AND SURFACES PROVIDED BY ROLLAND CONSULTING ENGINEERS LLC

CITY OF FRUITA IRRIGATION CONSTRUCTION NOTES:

1. 4" AND LARGER IRRIGATION LINES ARE TO BE CONSTRUCTED OF BELL AND SPIGOT CLASS 200 PVC.
2. 2" IRRIGATION MAIN LINES ARE TO BE CONSTRUCTED OF CLASS 200 PVC. 2" IRRIGATION SERVICE LINES ARE TO BE CONSTRUCTED OF CLASS 160 PVC.
3. PUMP CONNECTION RISERS WILL BE CONSTRUCTED OF SCHEDULE 40 PVC.
4. -RESERVED-
5. ANGLES IN IRRIGATION LINES ARE TO BE CONSTRUCTED AND THRUST BLOCKED IN THE SAME MANNER AS POTABLE WATERLINES.
6. BACKFILLING OF IRRIGATION TRENCHES SHALL BE IN ACCORDANCE WITH THE STANDARD TRENCH DETAIL. -RESERVED-
7. ALL VALVES ARE TO BE STANDARD BRASS POTABLE WATER GLOBE VALVES THE CAST IRON VALVE BOXES.
8. -RESERVED-.

ADOBE VIEW NORTH
Fruita
Adobe View Development Company LLC

WATER MANAGEMENT RECOMMENDATIONS

SUPPLY

IRRIGATION PROVIDER:	Grand Valley Irrigation Company	
SHARES		20.0
FLOW AVAILABLE (GPM)		**94**
TOTAL AREA SUMMARY		
TOTAL ACREAGE		8.8
IRRIGATED ACREAGE		4.4
WATER (GPM) NEEDED BASED ON TOTAL AREA		**84**
WATER SCHEDULE & TURF LIMITATION SUMMARY		
LOTS WATERING PER DAY		17
DAYS WATERING / LOT / WEEK		3
WATER WINDOW (HOURS)		12
LOTS WATERING AT ONE TIME		9
COMMON AREA IRRIGATION ACREAGE		0.1
WATER (GPM) NEEDED BASED ON SCHEDULE & TURF LIMITS PER LOT		**108**
WORST CASE WATER NEED (GPM)		**108**
STORAGE REQUIRED		
GALLONS		**10211**
AVERAGE DEPTH (FEET)		**7**
ACREAGE		**0.00**
SQUARE FEET		**195**

WATER MANAGEMENT RECOMMENDATION AND TURF LIMITATIONS

LOT TYPE A		LOT TYPE B		LOT TYPE C		COMMON	
>12000 and <15000		<10K <12KSF		<10000			
TURF SF:	6300	TURF SF:	5500	TURF SF:	4800	TURF AC:	0.07
GPM:	13	GPM:	11	GPM:	12	GPM:	2
HRS/DAY:	6.0	HRS/DAY:	6.0	HRS/DAY:		HRS/DAY:	6
DAYS/WK:	3	DAYS/WK:	3	DAYS/WK:		DAYS/WK:	3
LOT/TIME	2	LOT/TIME	6	LOT/TIME			

Calculations based on Irrigation Association of America Standards, and peak ET requirements based on closest available agronomic data.
Subdivision, based on utilizing 20 shares of inflow to be transferred to this headgate.

ASSUMES WATERING SCHEDULE TO BE
ODD LOTS - MONDAY,WEDNESDAY & FRIDAY
EVEN LOTS - TUESDAY,THURSDAY & SATURDAY
12 GALLONS PER MINUTE PRESSURIZED FLOW AVAILABLE TO EACH LOT.
PRESSURE AVAILABLE TO EACH LOT RANGES FROM 40 PSI TO 60 PSI PRESSURE .

EACH LOT SHALL BE ABLE TO WATER FOR A MAXIMUM OF THE TIME ALLOTTED ON THE CONSUMPTIVE USE CALCULATION UNLESS MODIFICATIONS ARE ALLOWED BY EXTRA AVAILABLE WATER AND THE HOA. LANDSCAPE LIMITATIONS ARE AS SHOWN ON THE CONSUMPTIVE USE CALCULATION IN SQUARE FEET OF TURF EQUIVALENT PER IRRIGATED LOT. HOA MUST REVIEW OR LIMIT EACH LOT IRRIGATION APPLICATION SYSTEM TO THE ASSUMED MAX FLOW. IF FLOW AVAILABLE IS LESS THAN ADJUDICATED RATIONING MAY NEED TO BE IMPLEMENTED, IF EXCESS WATER IS AVAILABLE THE HOA CAN AUTHORIZE ADDITIONAL WATERTIMES AND FLOWS.

INSTALLATION NOTES
PIPELINE & CONCRETE STRUCTURES

1. ALL GRADES SHALL BE CONSTRUCTED AS SHOWN ON PLANS UNLESS CHANGES ARE APPROVED BY AN AUTHORIZED WHCE EMPLOYEE.
2. ALL WORK SHALL BE CLEAN, SMOOTH AND NEAT.
3. ALL MATERIALS SHALL BE NEW, AND MEET ALL SPECIFICATIONS SHOWN ON THE PLAN, AND INSTALLED ACCORDING TO THE MANUFACTURERS RECOMMENDATIONS, OR AS SHOWN ON THESE PLANS, WHICHEVER IS MORE STRICT.
4. MINIMUM COVER & BACK FILL SHALL BE AS SHOWN ON THE PLANS. NO ROCK GREATER THAN 1" SHALL BE PLACED WITHIN 9" OF THE PIPE AND NO ROCKS GREATER THAN 3" IN THE REMAINING FILL.
5. COPPER TRACER WIRE SHALL BE SECURED TO THE TOP OF ALL MAINLINE UNDERGROUND PIPES, AND SHALL SURFACE AT ALL ENDS AND AIR VENTS. THIS WIRE SHALL BE CONTINUOUS OR HAVE AN APPROVED SPLICE. THIS WIRE SHALL BE 10 GAUGE SOLID STRAND 75 DEG. LOW DENSITY UL TYPE 600 VOLT,WITH NON-LINEAR POLYETHYLENE INSULATED SUITABLE FOR A DIRECT BURY APPLICATION. INSULATION WALL THICKNESS SHALL BE 0.045 INCHES MINIMUM. WIRE SHALL MEET UL493, UL83, AND UL1581 PHYSICAL AND ELECTRICAL STANDARDS.
6. CONCRETE SHALL BE COLORADO DEPARTMENT OF TRANSPORTATION (CDOT) STANDARD SPECIFICATION FOR ROAD AND BRIDGE CONSTRUCTION, 2011 EDITION, FOR CLASS D STRUCTURAL CONCRETE, UNLESS OTHERWISE SPECIFIED ON THE PLANS.
7. ALL CONCRETE SHALL BE CONSOLIDATED WITH A MECHANICAL VIBRATOR.
8. ALL EXPOSED CONCRETE EDGES SHALL BE CHAMFERED. ALL SURFACES SHALL BE FINISHED CLEAN, SMOOTH AND NEAT.
9. CONCRETE FORM TIES SHALL BE 3/4" SNAP CONES.
10. CONCRETE STRUCTURES SHALL BE COATED WITH WHITE CURING COMPOUND AND PROTECTED FROM FREEZING FOR ENTIRE CURING PERIOD OF 7 DAYS. CONCRETE SHALL BE ALLOWED 7 DAYS TO CURE BEFORE BACK FILL IS PLACED. (UNLESS PRE CAST AND CURED TO A 3000 PSI 7 DAY MINIMUM STRENGTH.) REPAIRS AND CONES SHALL BE FILLED IMMEDIATELY AFTER THE FORMS ARE STRIPPED. ANY MAJOR REPAIRS SHALL BE ACCOMPLISHED WITHIN 48 HOURS AFTER THE POUR.
11. MINIMUM REINFORCING SHALL BE AS SHOWN ON THE PLANS OR #4 REBAR ON 8" CENTERS, OR EQUAL, FOR 6 IN WALL THICKNESS. REINFORCING BARS FOR SINGLE MATS SHALL BE PLACED IN THE CENTER OF THE SECTION. THE BARS SHALL BE COLD BENT AND CONTINUOUS OR SPLICED AROUND CORNERS AND BETWEEN WALLS AND FLOOR. STEEL SPLICES SHALL BE 16" FOR #4 BAR MINIMUM.
12. ALL EXISTING STRUCTURES AND DITCHES DESIGNATED TO BE REMOVED, OR WHICH PREVENT CONSTRUCTION AS DESIGNED SHALL BE REMOVED OR RELOCATED AT THE DIRECTION OF THE PROPERTY OWNER. DISPOSAL OF ALL MATERIALS SHALL BE IN ACCORDANCE WITH ALL LOCAL, STATE, & FEDERAL, CODES, LAWS AND REGULATIONS.
13. ALL GRADES SHALL BE BROUGHT TO FINISH GRADE AND COMPACTED PRIOR TO TRENCHING OF AND INSTALLATION OF PIPE AND APPURTENANCES DESIGNED. COMPACTION SHALL BE TO A DEGREE OF COMPACTION EQUAL TO OR GREATER THAN THAT OF THE SURROUNDING ON SITE MATERIAL.
14. ALL EXPOSED PVC SHALL BE CLEANED & PAINTED WITH 2 COATS OF EXTERIOR ACRYLIC LATEX PAINT.
15. IF WATER TABLE EXISTS GRAVEL BEDDING SHALL BE INSTALLED AS APPROVED BY THE ENGINEER OR AUTHORIZED TECHNICIAN. ALL DIFFERING SITE CONDITIONS SHALL BE REPORTED TO AN AUTHORIZED WHCE REPRESENTATIVE.
16. ALL FLANGES TO BE #150 FULL FACED PVC SOLVENT WELD WITH STAINLESS STEEL BOLTS, NUTS AND RED RUBBER GASKETS.
17. ALL PVC PIPE SOLVENT WELD SCHEDULE 40 UNLESS OTHER WISE NOTED. UTILIZE IPS MEDIUM BODIED 705 OR HEAVY BODIED 711 CEMENT, AND IPS 70 PURPLE PRIMER ONLY. NO WET AND DRY OR HOT & COLD CEMENTS / PRIMERS WILL BE ACCEPTED. INSTALL IN ACCORDANCE WITH MANUFACTURE INSTRUCTIONS.
18. ALL PVC SOLVENT WELD FITTINGS 4" AND ABOVE IN PRESSURIZED APPLICATIONS, CL160 OR GREATER SHALL BE SCH 80 OR DUCTILE IRON UNLESS OTHERWISE NOTED ON PLANS.
19. THRUST BLOCKS SHALL BE INSTALLED AT ALL ABRUPT CHANGES IN GRADE ALIGNMENT.
20. MANUFACTURE RECOMMENDED STRAIGHT LINE DISTANCE ON ALL SPECIALTY VALVES, FLOWMETERS AND PUMPS BEFORE AND AFTER.
21.DEFLECTION OF PIPELINE SHALL ONLY BE ALLOWED IF DESIGNED ON PLANS OR APPROVED BY AUTHORIZED WHCE PERSONNEL DEFLECTION SHALL OCCUR ONLY ON PIPELINES, NOT AT JOINTS.

OPERATIONS & MAINTENANCE NOTES:

1. AS WITH ALL IRRIGATION SYSTEMS, PERIODIC MAINTENANCE AND OPERATION PRACTICES SHALL BE PERFORMED.
2. ALL DEBRIS AND LARGE OBJECTS THAT MAY OBSTRUCT FLOW SHALL BE REMOVED IMMEDIATELY FROM THE FLOW AREAS OF ALL PIPES AND STRUCTURES.
3. ALL INLET SCREENS MUST BE CLEANED PERIODICALLY TO PREVENT FLOW INHIBITION
4. ALL STRUCTURES NEED TO BE CLEANED PERIODICALLY TO REMOVE ALL SEDIMENTATION BUILD UP THAT INHIBITS FLOW AND REDUCES CAPACITY OF FLOW OR TEMPORARY & PERMANENT STORAGE.
5. ALL PIPES SHALL BE OPERATED TO FLUSH SEDIMENTS BY USING INCREASED VOLUMES OF WATER AT INCREASED CAPACITIES TO FLUSH SEDIMENT FORM ALL LINES. THIS METHOD MAY NOT REMOVE ALL SEDIMENTS. HIGH PRESSURE JETTING MAY BE NECESSARY TO REMOVE ALL SEDIMENTS.
6. ALL APPURTENANCES SHALL BE OPERATED AND MAINTAINED ACCORDING TO THE MANUFACTURERS RECOMMENDATIONS.
7. ALL SYSTEMS SHALL BE DRAINED, PUMPED OR BLOWN OUT DURING EXTENDED PERIODS OF NON USE TO PREVENT DAMAGE DUE TO FREEZING CONDITIONS, CORROSION, AND SEDIMENTATION.
8. PERIODIC MAINTENANCE OF FLOW MEASURING DEVICE MAY BE REQUIRED TO PREVENT INHIBITED FLOW. DEBRIS AND SEDIMENT MAY NEED TO BE REMOVED FOR PROPER MEASURING OPERATION.
9. AIR VENTS IN LOW HEAD APPLICATIONS MAY REQUIRE MORE FREQUENT MAINTENANCE,AIR VENTS NEED TO BE CLEARED OF ANY OBJECTS TO PREVENT UNNECESSARY LEAKAGE.

SHEET INDEX

I-1.0 IRRIGATION SYSTEM COVER
I-2.0 IRRIGATION SYSTEM PLAN VIEW
I-3.0 PROFILE VIEW - IRRIGATION SYSTEM STA 0+00 TO 11+60
I-3.1 PROFILE VIEW - IRRIGATION SYSTEM STA 11+60 TO 16+50
I-3.2 PROFILE VIEW - IRRIGATION SYSTEM STA 16+50 TO 25+50
I-3.3 PROFILE VIEW - IRRIGATION SYSTEM STA 25+50 TO EOP
I-3.4 PROFILE VIEW - IRRIGATION SYSTEM STA 30+00 TO 40+00
I-4.0 PUMP STATION
I-4.1 DETAILS

EARTH FILL

1. ALL WORK SHALL BE DONE ACCORDING TO NRCS PLANS, STANDARDS AND SPECIFICATIONS #23 (EARTHFILL).
2. FOUNDATION PREPARATION SHALL CONSIST OF REMOVAL OF ALL BRUSH, BOULDERS, SOD, TREES, LOGS, STUMPS, RUBBISH AND SHALL BE STRIPPED TO SUFFICIENT DEPTH TO REMOVAL ALL OBJECTIONABLE MATERIAL.
3. FOUNDATION SHALL BE THOROUGHLY SCARIFIED BEFORE PLACEMENT OF FILL, AND SHALL BE OF SIMILAR MOISTURE CONTENT AS REQUIRED OF THE FILL MATERIAL FOR PROPER COMPACTION.
4. ALL FOUNDATION EXCAVATION SHALL BE TO THE LINES AND GRADES SHOWN ON THE DRAWING, STAKED IN THE FIELD, OR SPECIFIED BY THESE CONSTRUCTION SPECIFICATIONS. ALL FOUNDATION EXCAVATION SHALL BE FILLED TO THE SAME SPECIFICATIONS AS THE EMBANKMENT FILL.
5. EARTHFILL SHALL NOT BE PLACED UNTIL THE SITE PREPARATION HAS BEEN COMPLETED, INSPECTED, AND APPROVED BY AUTHORIZED NRCS PERSONNEL.
6. EARTHFILL SHALL BE CONSTRUCTED AS SPECIFIED ON THE DRAWING OR STAKED IN THE FIELD.
7. EARTHFILL SHALL BE PLACED IN UNIFORM LIFTS IN APPROXIMATELY HORIZONTAL CONTINUOUS LAYERS, AND SHALL BE FREE OF SOD, ROOTS, STONES, FROZEN SOIL, OR OTHER UNSUITABLE FILL MATERIALS.
8. FOR MANUALLY GUIDED COMPACTION THE MAXIMUM UNCOMPACTED LAYER THICKNESS SHALL BE NINE INCHES FOR EARTHFILL AND FOUR INCHES FOR FOUNDATIONS, AND THE MAXIMUM PARTICLE SIZE NOT TO EXCEED SIX INCHES. THE MAXIMUM UNCOMPACTED LIFT THICKNESS FOR ALL OTHER COMPACTION SHALL BE NINE INCHES.
9. MOISTURE CONTENT OF THE FOUNDATION AND FILL MATERIAL SHALL BE ADEQUATE TO OBTAIN ADEQUATE COMPACTION. FILL MATERIAL TOO WET SHALL BE SPREAD AND DRIED UNTIL IT MEETS PROPER MOISTURE CONTENT.
10. COMPACTION OF FILL (OTHER THAN ADJACENT TO STRUCTURES) SHALL BE BY 2 PASSES MINIMUM OVER THE ENTIRE SURFACE BY RUBBER TIRED EQUIPMENT OR SHEEP FOOT ROLLER WEIGHING A MINIMUM OF 1000 POUNDS PER FOOT OF COMPACTING WIDTH, OR EQUIVALENT AS METHOD AS APPROVED BY AUTHORIZED NRCS PERSONNEL.
11. EARTH FILL AROUND STRUCTURES (PIPES) SHALL BE COMPACTED TO THAT EQUAL TO THE DEGREE OF COMPACTION OF THE SURROUNDING MATERIAL. THIS SHOULD BE ACCOMPLISHED BY HAND TAMPING OR USE OF MANUALLY OPERATED COMPACTORS (JUMPING JACK TYPE). USE OF EQUIPMENT MOUNTED COMPACTORS MAY ONLY BE USED WITH APPROVAL OF AUTHORIZED NRCS PERSONNEL.

Know what's **below.**
Call before you dig.

Title:
ADOBE VIEW NORTH
IRRIGATION DISTRIBUTION
COVER
FRUITA, COLORADO

Drawn By:	Designed By:	Reviewed By:	Scale:
RLA	RLA	RLA	NTS

Rev	Date	Description	By
1.0	9/28/2016	100% DD	RLA
.	.	.	.

Western Heritage
Consulting & Engineering
PO BOX 2117
Mills, WY 82644
307.215.7430
info@westernhce.com

Job Number: 16WHC702
Sheet Number: I 1.0

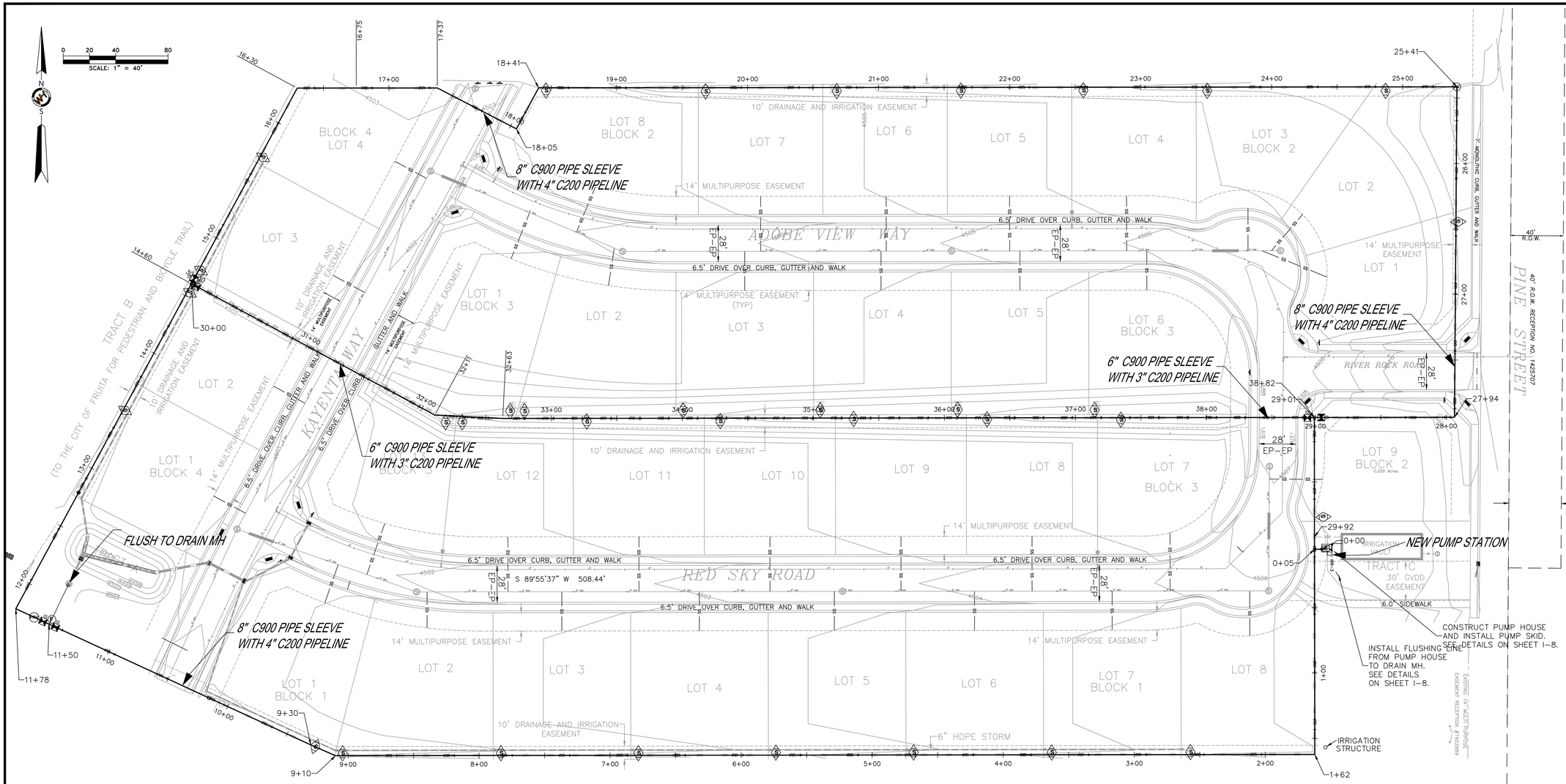

NOTE:
BASE MAP PROVIDED BY Rolland Consulting Engineers LLC.

LEGEND

S	SINGLE YARD TAP
IRR-4	4" CL200 PVC PIPE
IRR-3	3" CL200 PVC PIPE
AV	AIR RELIEF VALVE
PRV	COMBINATION PRESSURE RELEASE AND AIR RELIEF VALVES
F	4" CI FLUSH VALVE
M	4" FLOW METER
IS	ISOLATION VALVE SAME SIZE AS PIPE (CI GATE VALVE)
W	DOMESTIC WATER BY OTHERS
SS	SANITARY SEWER BY OTHERS
SD	STORM LINE BY OTHERS
4505	PROPOSED CONTOURS BY OTHERS

Know what's below. Call before you dig.

ADOBE VIEW NORTH IRRIGATION DISTRIBUTION
PLAN VIEW
FRUITA, COLORADO

Title:

By:	Drawn By: RLA	Designed By: RLA	Reviewed By: RLA	Scale: 1"=50'-D 1"=100'-B
RLA				

Rev	Date	Description
1.0	9/28/2016	100% DD

Western Heritage Consulting & Engineering
PO BOX 2117
Mills, WY 82644
307.215.7430
info@westernhce.com

Job Number: 16WHC702

Sheet Number: I 2.0

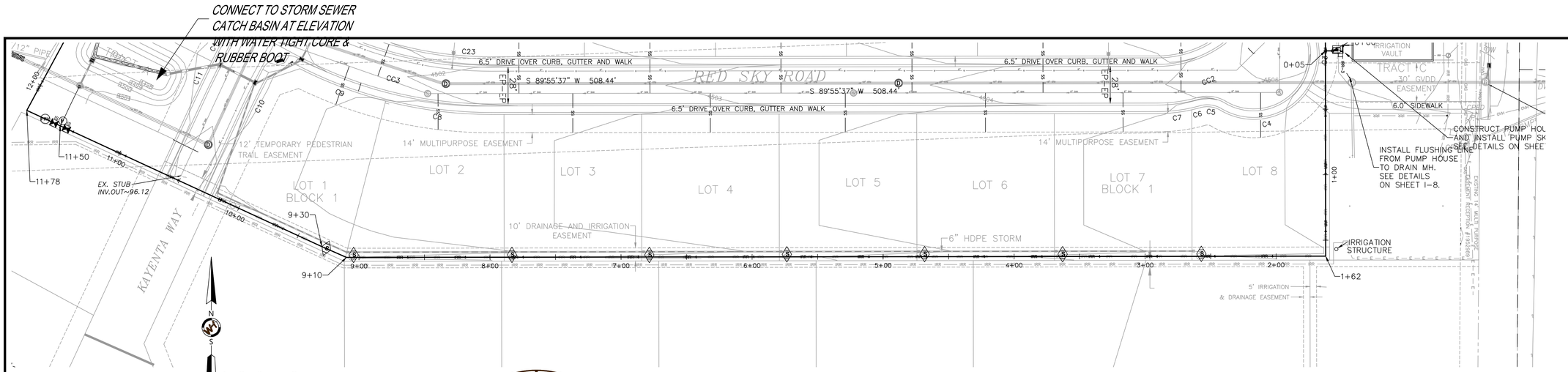

W.f 3.0.1 PLAN VIEW - IRRIGATION SYSTEM BLOCK 1 Lots 1-8
STA 0+00 to STA 11+60
SCALE 1"=40ft Horizontal

NOTE: ALL FITTINGS SHALL BE DUCTILE IRON

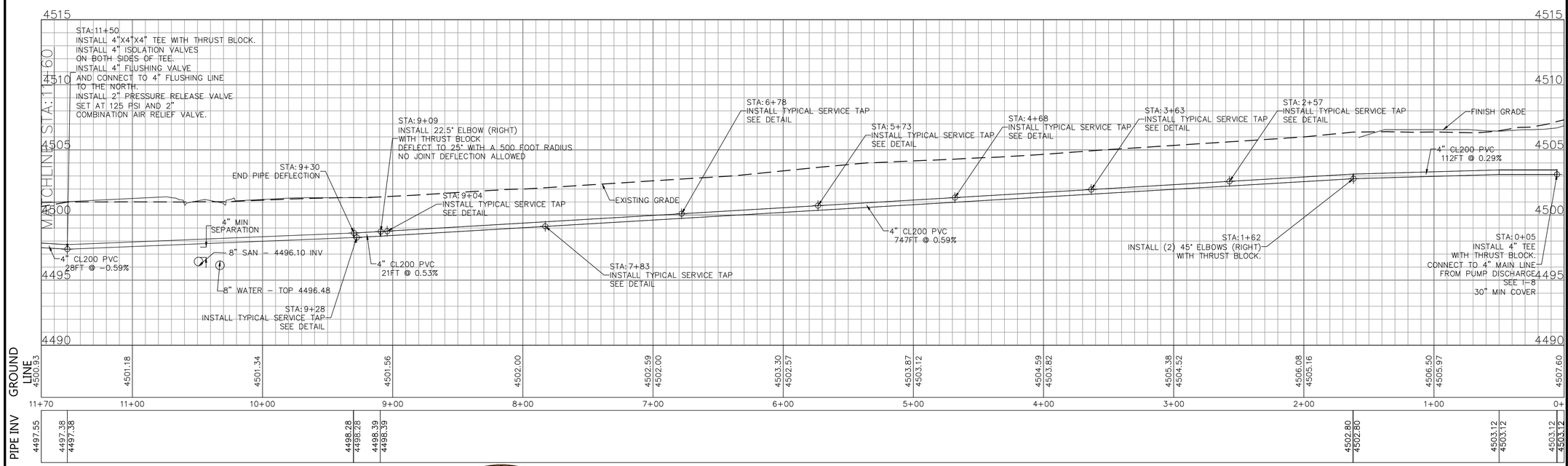

W.f 3.0.2 Pipeline Profile- IRRIGATION SYSTEM BLOCK 1 Lots 1-8
STA 0+00 to STA 11+60
SCALE 1"=40ft Horizontal 1"=4ft Vertical

UTILITY INFORMATION OTHER THAN IRRIGATION PROVIDED FOR CONVENIENCE, CONTRACTOR SHALL CONFIRM ELEVATIONS AND LOCATION AGAINST UTILITY DESIGNS BY ROLLAND CONSULTING ENGINEERS LLC

811 Know what's below. Call before you dig.

Title:
ADOBE VIEW NORTH
IRRIGATION DISTRIBUTION
PROFILE STATION 0+00-11+60
FRUITA, COLORADO

Drawn By: RLA
Designed By: RLA
Reviewed By: RLA
Scale: 1"=40'-D 1"=80'-B

Rev	Date	Description	By
1.0	9/28/2016	100% DD	RLA

Western Heritage Consulting & Engineering
PO BOX 2117
Mills, WY 82644
307.215.7430
info@westernhce.com

Job Number: 16WHC702
Sheet Number: I 3.0

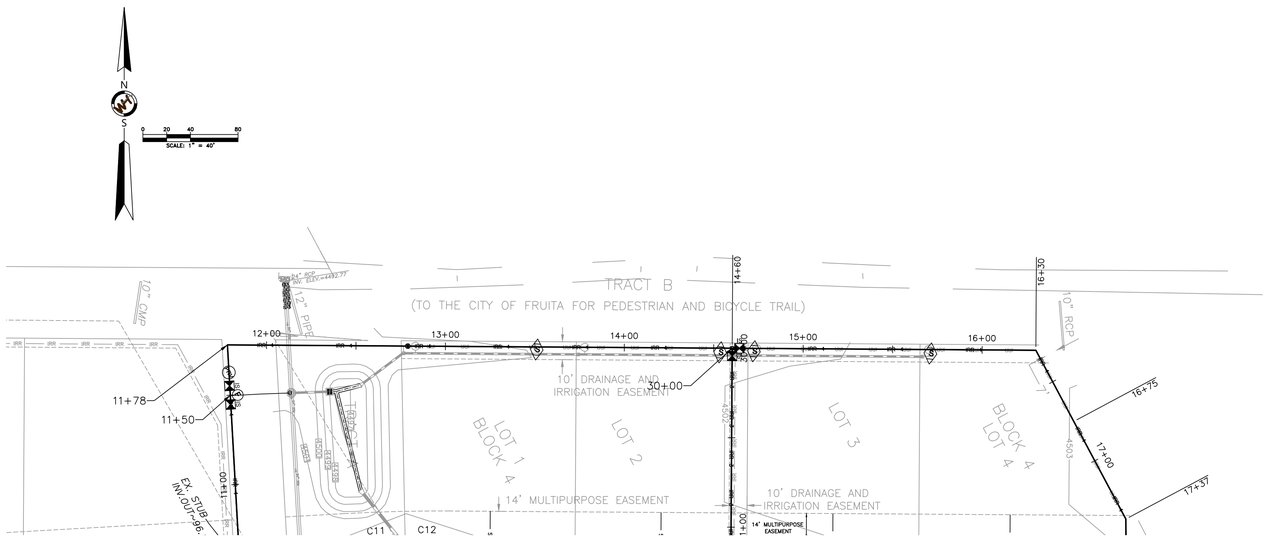

W&H 3.1.1 PLAN VIEW - IRRIGATION SYSTEM
BLOCK 4 Lots 1-4
STA 11+60 to STA 16+50
SCALE 1"=40ft Horizontal

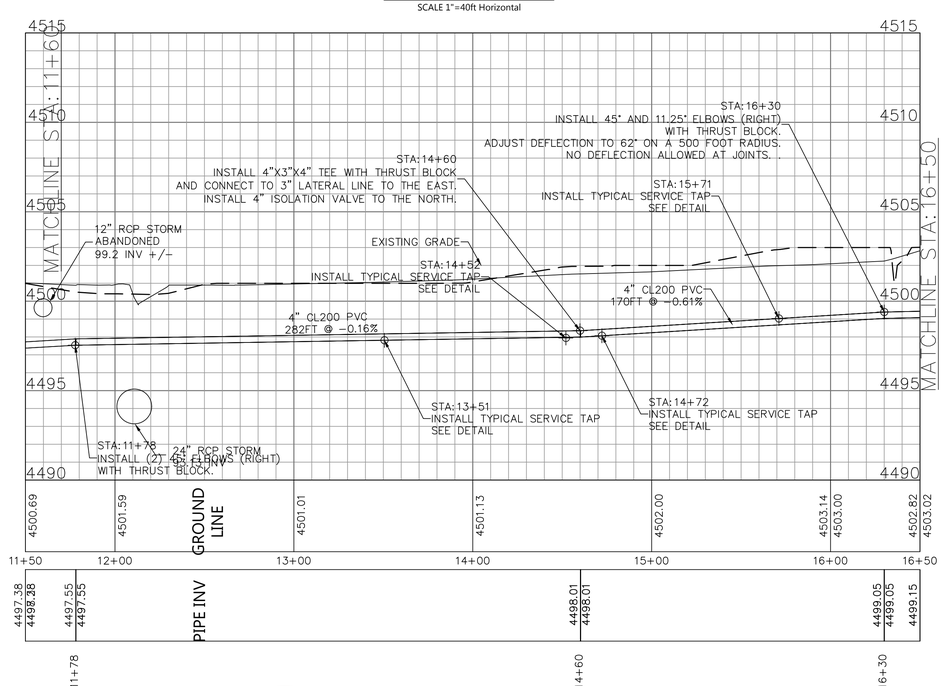

W&H 3.1.2 Pipeline Profile- IRRIGATION SYSTEM
BLOCK 4 Lots 1-4
STA 11+60 to STA 16+50
SCALE 1"=40ft Horizontal 1"=4ft Vertical

NOTE: ALL FITTINGS SHALL BE DUCTILE IRON

UTILITY INFORMATION OTHER THAN IRRIGATION PROVIDED FOR CONVENIENCE, CONTRACTOR SHALL CONFIRM ELEVATIONS AND LOCATION AGAINST UTILITY DESIGNS BY ROLLAND CONSULTING ENGINEERS LLC

811 Know what's below. Call before you dig.

ADOBE VIEW NORTH
IRRIGATION DISTRIBUTION
PROFILE STATION 11+60-16+50
FRUITA, COLORADO

Rev	Date	Description	By
1.0	9/26/2016	100% DD	RLA

Designed By: RLA
Reviewed By: RLA
Scale: 1"-40'- D 1"-80'- B

Western Heritage Consulting & Engineering
PO BOX 2117
Mills, WY 82644
307.215.7430
info@westernhce.com

Job Number: 16WHC702
Sheet Number: I 3.1

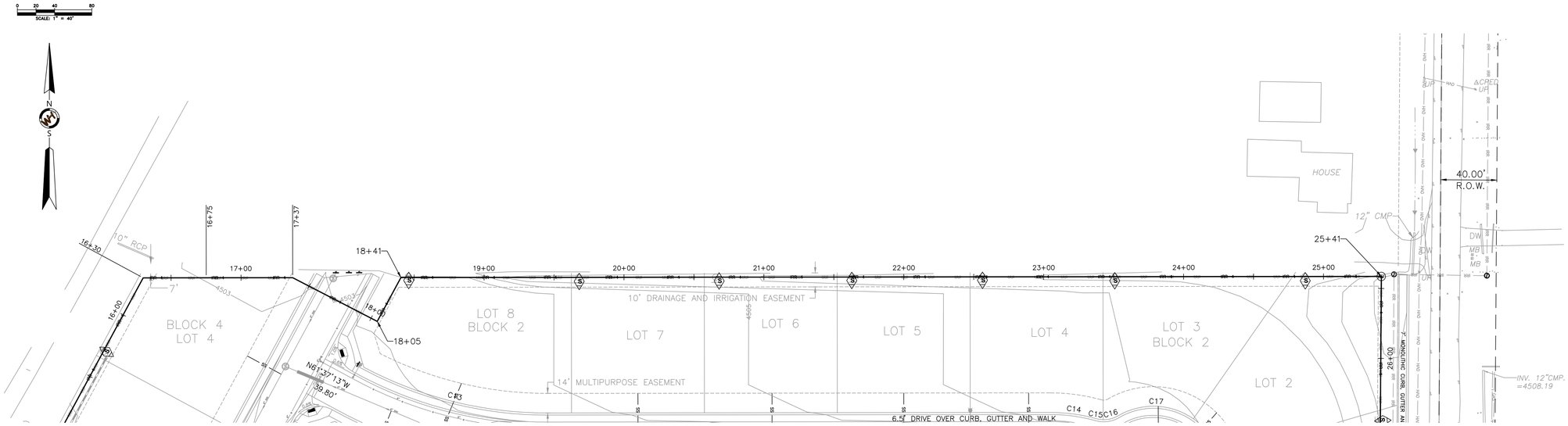

3.2.1 PLAN VIEW - IRRIGATION SYSTEM BLOCK 2 Lots 2-8
STA 16+50 to STA 25+50
SCALE 1"=40ft Horizontal 1"=4ft Vertical

NOTE: ALL FITTINGS SHALL BE DUCTILE IRON

UTILITY INFORMATION OTHER THAN IRRIGATION PROVIDED FOR CONVENIENCE, CONTRACTOR SHALL CONFIRM ELEVATIONS AND LOCATION AGAINST UTILITY DESIGNS BY ROLLAND CONSULTING ENGINEERS LLC

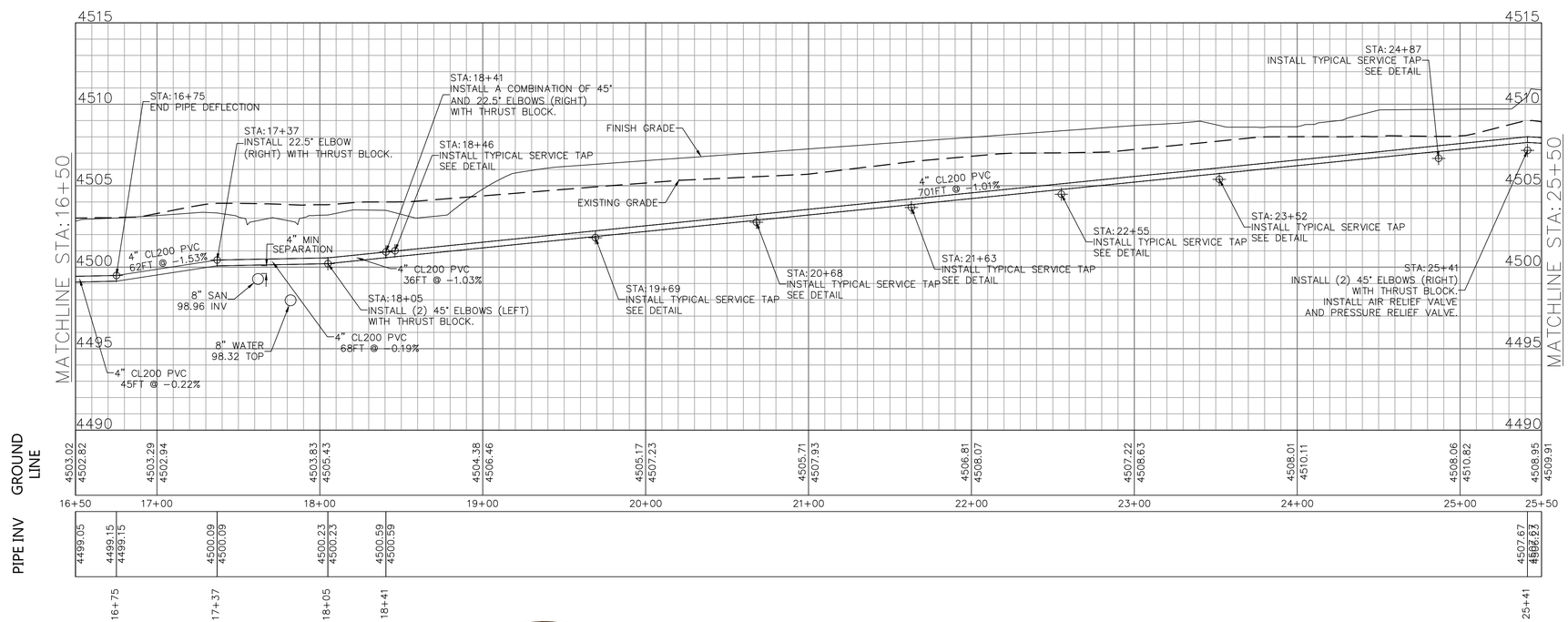

3.2.2 Pipeline Profile - IRRIGATION SYSTEM BLOCK 2 Lots 2-8
STA 16+50 to STA 25+50
SCALE 1"=40ft Horizontal 1"=4ft Vertical

Know what's below. Call before you dig.

ADOBE VIEW NORTH
IRRIGATION DISTRIBUTION
PROFILE STATION 16+50-25+50
FRUITA, COLORADO

Rev	Date	Description	By
1.0	9/26/2016	100% DD	RLA

RLA
Designed By: RLA
Reviewed By: RLA
Scale: 1"=40'-D 1"=80'-B

Western Heritage
Consulting & Engineering
PO BOX 2117
Mills, WY 82644
307.215.7430
info@westernhce.com

Job Number: 16WHC702
Sheet Number: I 3.2

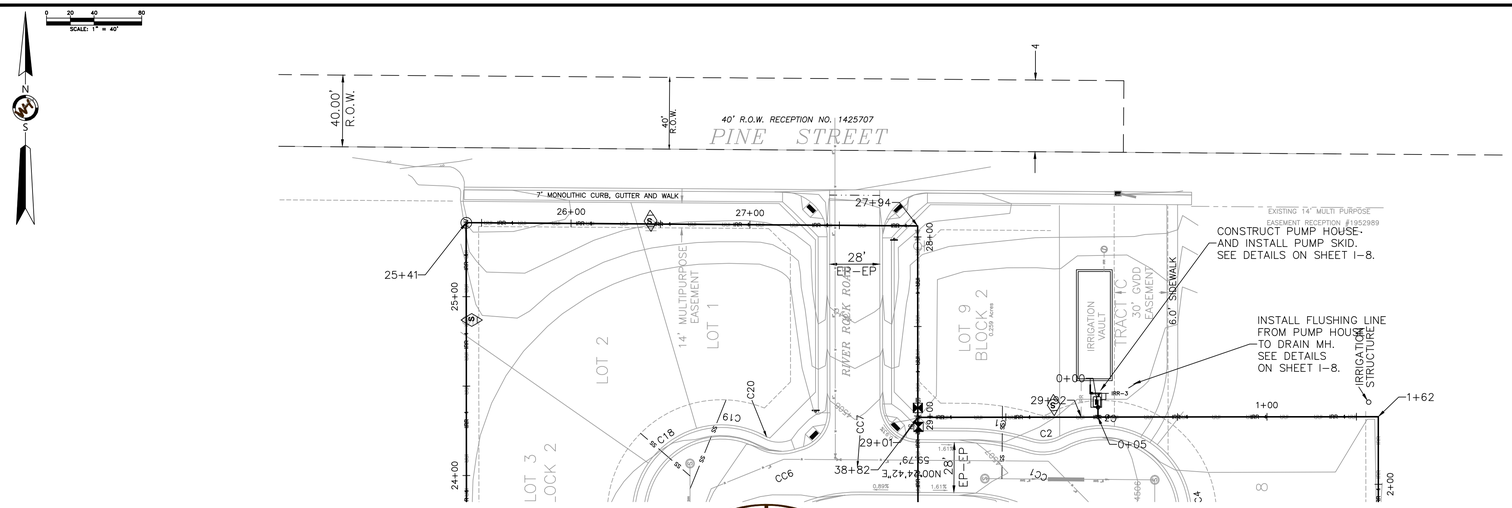

W.H 3.3.1 PLAN VIEW - IRRIGATION SYSTEM BLOCK 2 Lots 1-2 & 9
STA 25+50 to EOP
SCALE 1"=40ft Horizontal

NOTE: ALL FITTINGS SHALL BE DUCTILE IRON

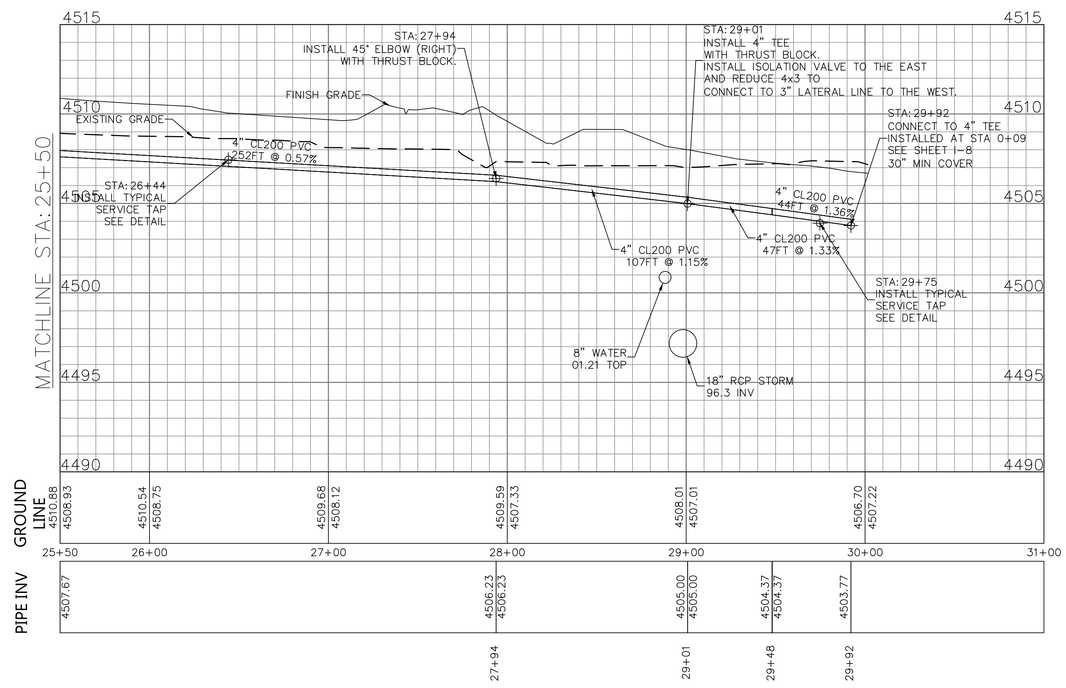

W.H 3.3.2 Pipeline Profile- IRRIGATION SYSTEM BLOCK 2 Lots 1-3
STA 25+50 to EOP
SCALE 1"=40ft Horizontal 1"=4ft Vertical

UTILITY INFORMATION OTHER THAN IRRIGATION PROVIDED FOR CONVENIENCE, CONTRACTOR SHALL CONFIRM ELEVATIONS AND LOCATION AGAINST UTILITY DESIGNS BY ROLLAND CONSULTING ENGINEERS LLC

811 Know what's below. Call before you dig.

ADOBE VIEW NORTH
IRRIGATION DISTRIBUTION
PROFILE STATION 25+50-EOP
FRUITA, COLORADO

RLA
Designed By: RLA
Reviewed By: RLA
Scale: 1"=40' - D 1"=80' - B

Rev	Date	Description	By
1.0	9/28/2016	100% DD	RLA

Western Heritage Consulting & Engineering
PO BOX 2117
Mills, WY 82644
307.215.7430
info@westernhce.com

Job Number: 16WHC702
Sheet Number: I 3.3

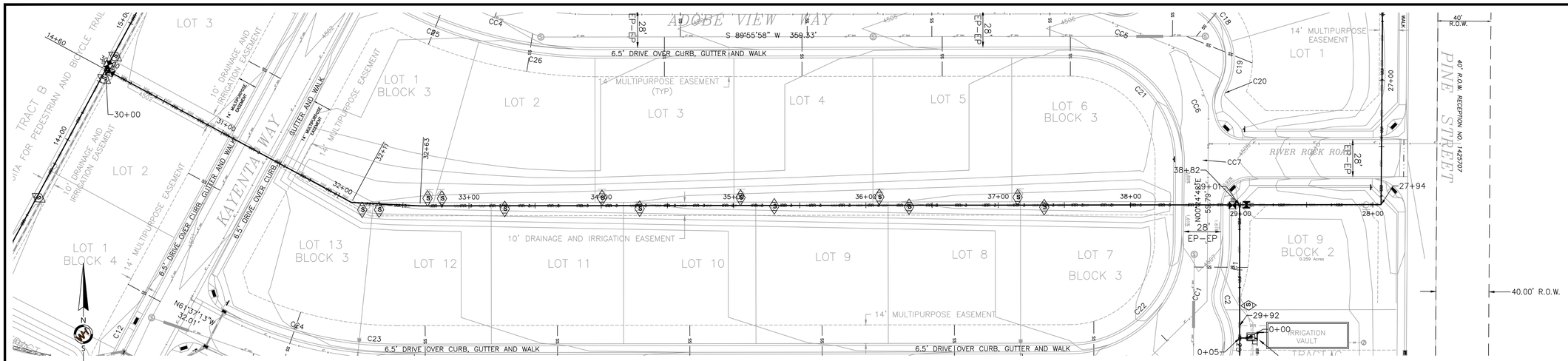

3.4.1 Pipeline Profile- IRRIGATION SYSTEM BLOCK 3 Lots 1-13

STA 30+00 to STA 38+82

SCALE 1"=40ft Horizontal

NOTE: ALL FITTINGS SHALL BE DUCTILE IRON

UTILITY INFORMATION OTHER THAN IRRIGATION PROVIDED FOR CONVENIENCE, CONTRACTOR SHALL CONFIRM ELEVATIONS AND LOCATION AGAINST UTILITY DESIGNS BY ROLLAND CONSULTING ENGINEERS LLC

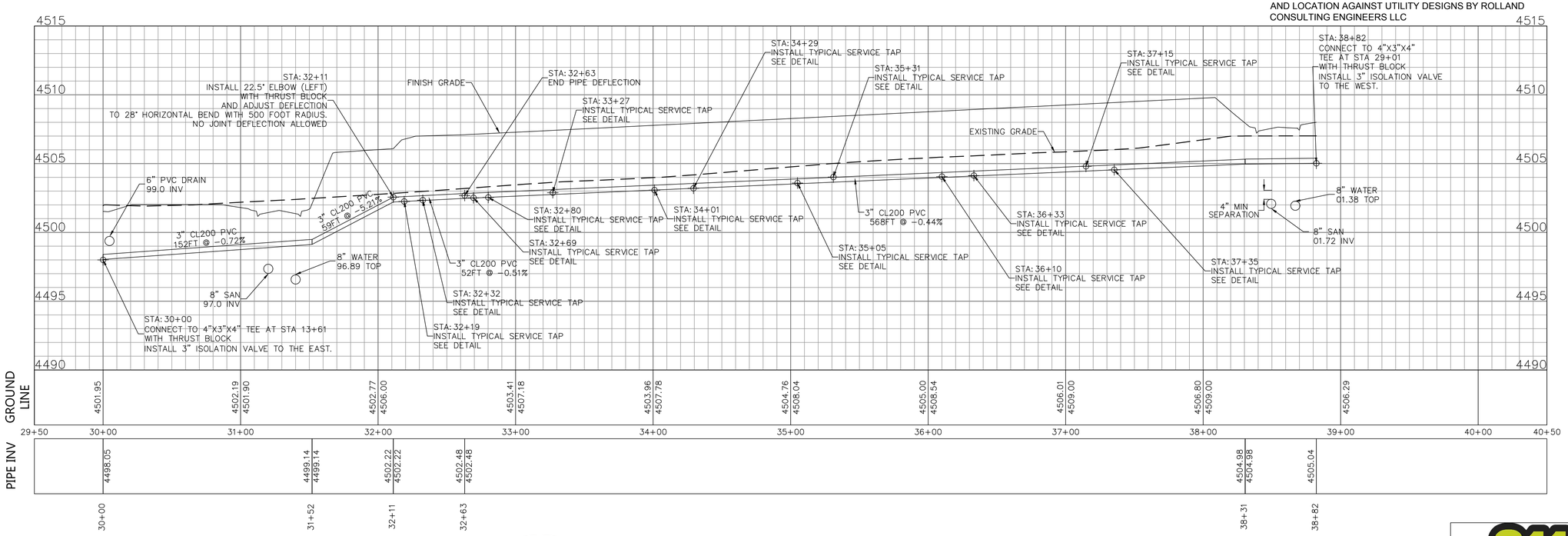

3.4.2 Pipeline Profile- IRRIGATION SYSTEM BLOCK 3 Lots 1-13

STA 30+00 to STA 38+82

SCALE 1"=40ft Horizontal 1"=4ft Vertical

Know what's **below.**
Call before you dig.

ADOBE VIEW NORTH
IRRIGATION DISTRIBUTION
PROFILE STATION 30+00-38+82
FRUITA, COLORADO

Rev	Date	Description	By
1.0	9/28/2016	100% DD	RLA

RLA
Designed By: RLA
Reviewed By: RLA
Scale: 1"=40' D 1"=80' B

Western Heritage
Consulting & Engineering
PO BOX 2117
Mills, WY 82644
307.215.7430
info@westernhce.com

Job Number: 16WHC702
Sheet Number: I 3.4

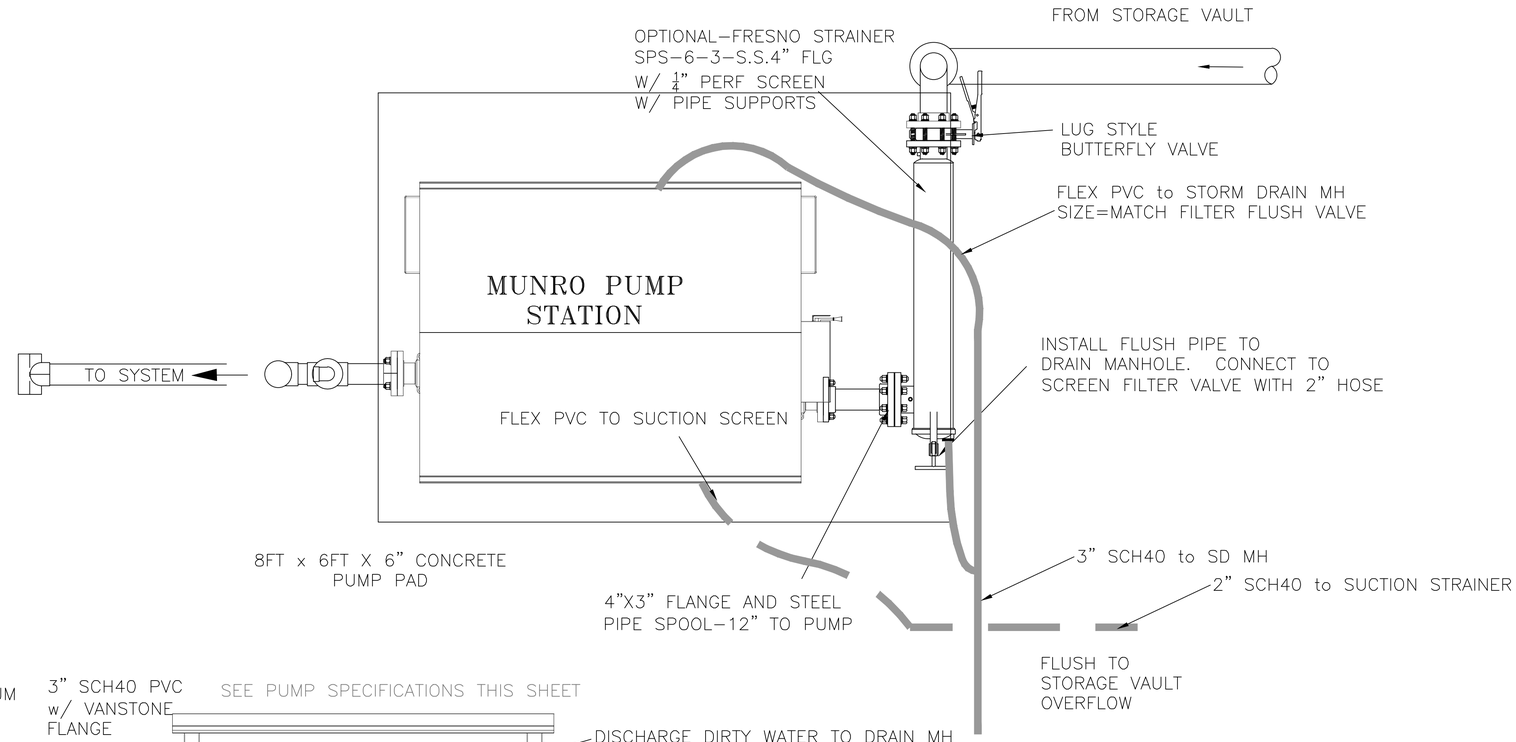

PUMP STATION PLAN

4.0.1

N.T.S.

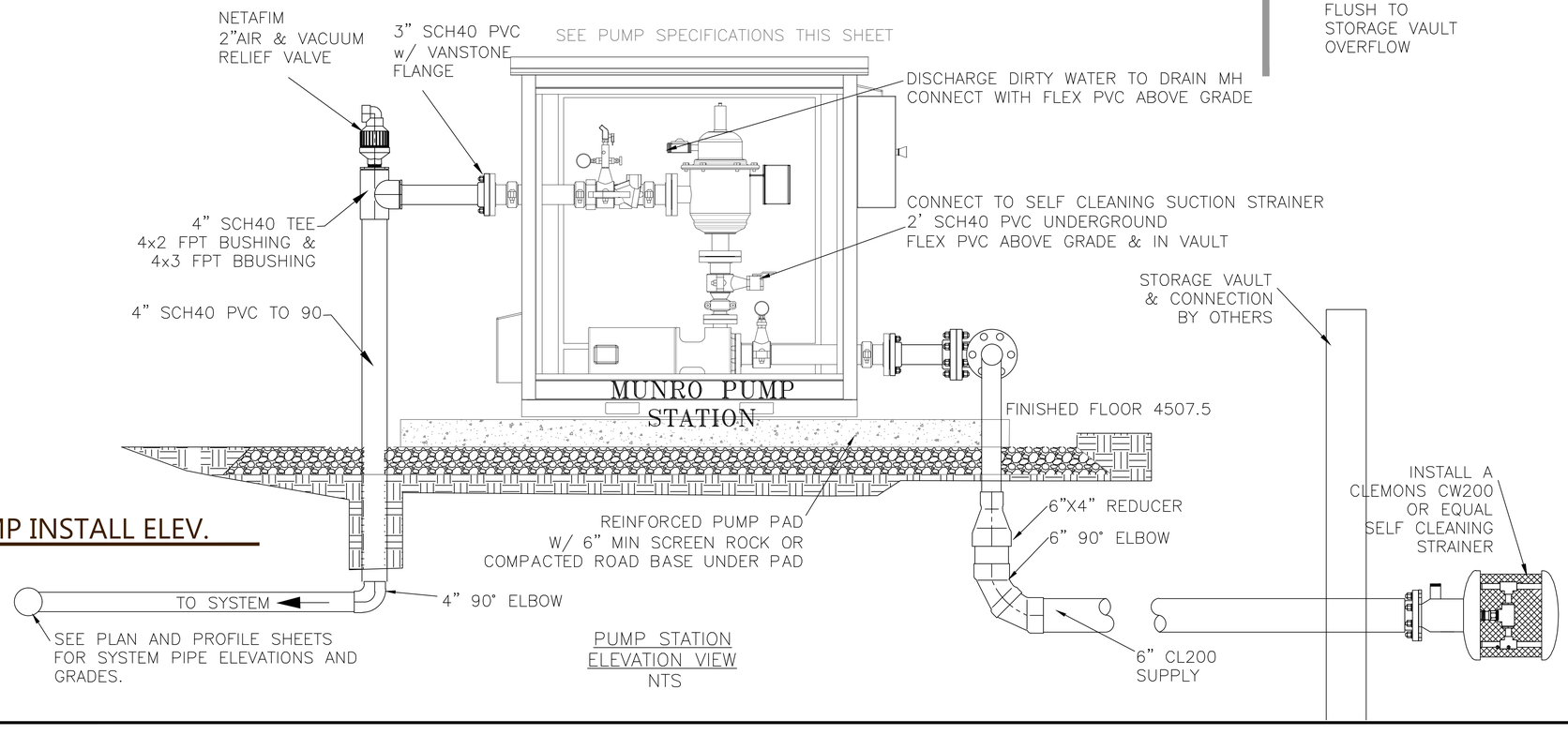

PUMP INSTALL ELEV.

4.0.2

N.T.S.

PUMP STATION
ELEVATION VIEW
NTS

Know what's **below.**
Call before you dig.

ADOBE VIEW NORTH
IRRIGATION DISTRIBUTION
PUMP STATION
FRUITA, COLORADO

Rev	Date	Description	By
1.0	9/28/2016	100% DD	RLA

RLA
Designed By: RLA
Reviewed By: RLA
Scale: 1"=40'-D 1"=80'-B

Western Heritage
Consulting & Engineering
PO BOX 2117
Mills, WY 82644
307.215.7430
info@westernhce.com

Job Number: 16WHC702
Sheet Number: I 4.0

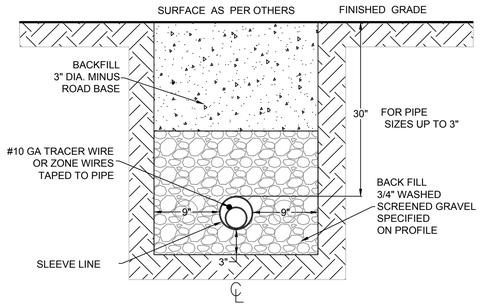

4.1.1 SLEEVE-ROAD/DRIVE
N.T.S.

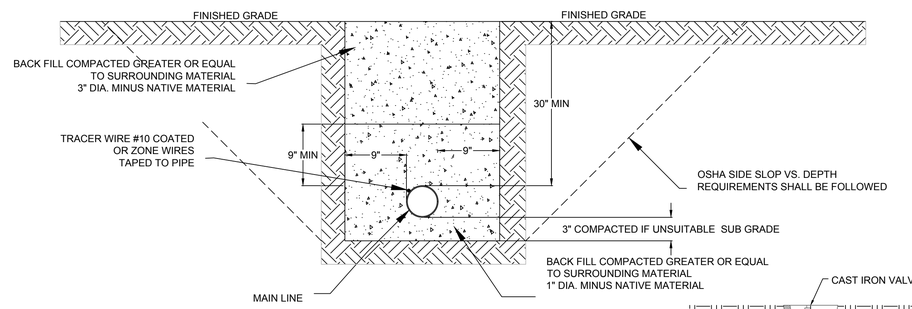

4.1.2 TYPICAL TRENCH DETAIL
N.T.S.

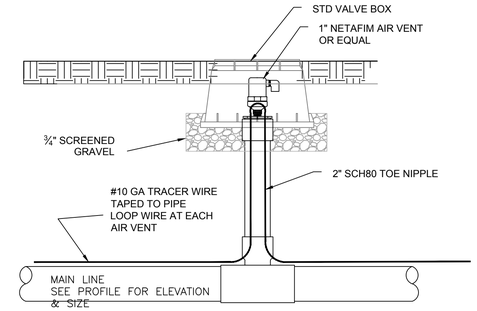

4.1.3 AIR VENT
N.T.S.

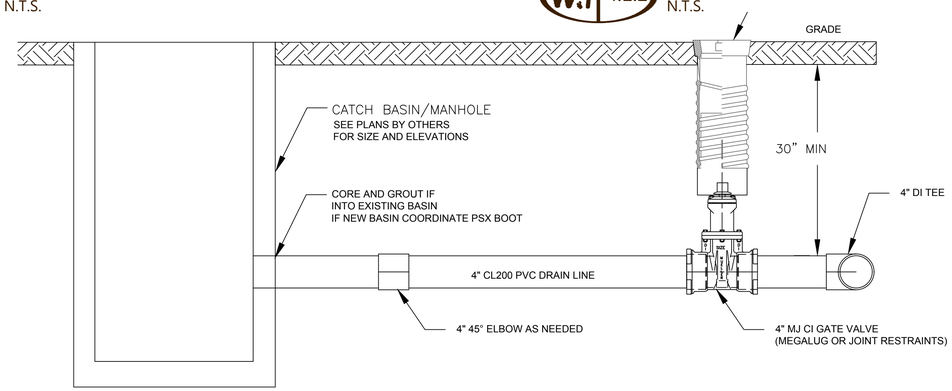

4.1.4 FLUSH TO STORM DRAIN
N.T.S.

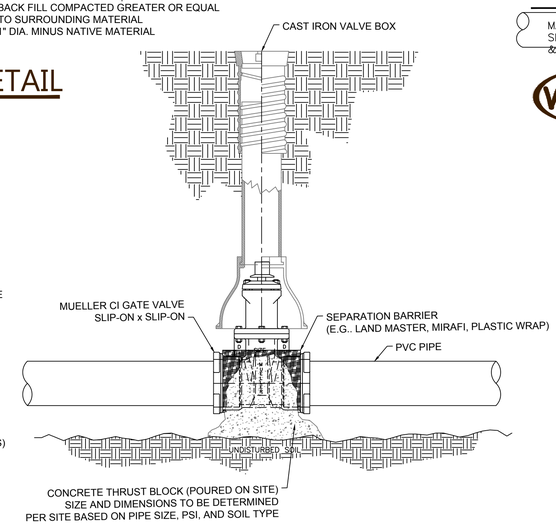

4.1.5 GATE VALVE ISOLATION
N.T.S.

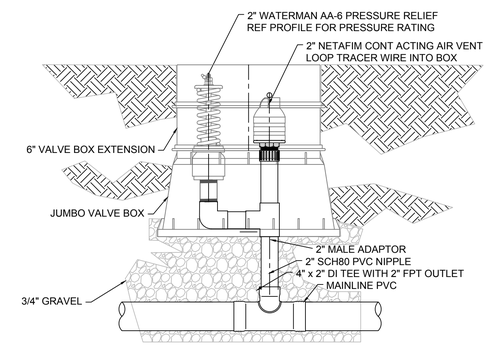

4.1.6 AIR VENT & PRV
N.T.S.

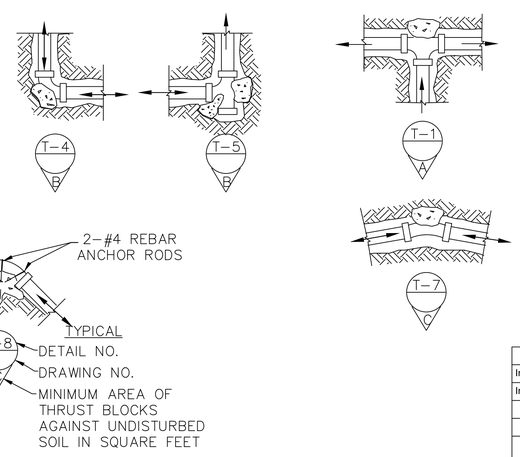

CONCRETE THRUST BLOCKS					
Input Max. Working Pressure (psi):				70	
Input Allowable Passive Soil Pressure (bl./sq.ft):				700	
	BEARING AREA (sq. ft.)				
Pipe Size (inches)	BENDS				Tees, Dead Ends
	90	45	22 1/2	11 1/4	
3	1.0	0.5	0.3	0.1	0.7
4	1.8	1.0	0.5	0.2	1.2

4.1.7 THRUST BLOCKS
N.T.S.

CITY OF FRUITA STANDARD TAP AND RISER DETAIL
PER CITY OF FRUITA SPECIFICATION

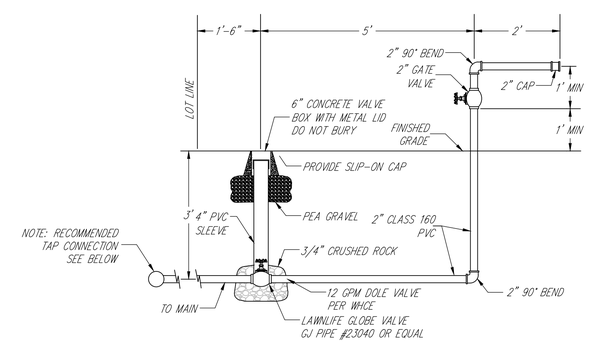

TYPICAL IRRIGATION RISER DETAIL
(FOR NEW CONNECTIONS TO CITY SYSTEM)
NTS

NOTE: VALVE AND RISER MUST BE ACCESSIBLE TO THE CITY OF FRUITA. WHERE LOT IS FENCED, VALVE AND RISER MUST BE LOCKED OUTSIDE THE FENCE.

4.1.8 CITY OF FRUITA TAP DETAIL
N.T.S.

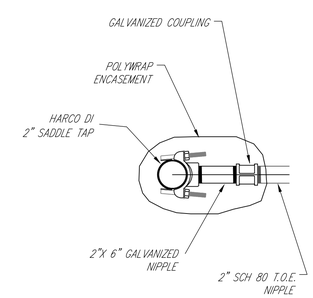

2" SADDLE TAP DETAIL
NTS

Know what's below.
Call before you dig.

ADOBE VIEW NORTH
IRRIGATION DISTRIBUTION
DETAILS
FRUITA, COLORADO

Rev	Date	Description	By
1.0	9/28/2016	100% DD	RLA

RLA
Designed By: RLA
Reviewed By: RLA
Scale: NTS

Western Heritage
Consulting & Engineering
PO BOX 2117
Mills, WY 82644
307.215.7430
info@westernhce.com

Job Number: 16WHC702
Sheet Number: I 4.1