Construction Stormwater Management Plan
For
Aspen Village

August 22, 2016

Introduction

*This CSWMP for **Aspen Village Subdivision** is formatted and presented consistent with Mesa County SWMM and State of Colorado SWMP criteria, and local guidance provided by the 5-2-1 Drainage Authority. There are no exceptions to State required inclusions in the plan. The following CSWMP is organized and presented as follows:*

Section 1: Site Description
Section 2: Site Map (Appendix A)
Section 3: Stormwater Management Controls
Section 4: Final Stabilization
Section 5: Inspection and Maintenance Procedures
Appendix A: BMP Map
Appendix B: 5-2-1 Drainage Authority Inspection Report Template
Appendix C: Best Management Practice (BMP) Details

This CSWMP was prepared by Marc Kenney of River City Consultants, Inc. 744 Horizon Court Suite 110, Grand Junction, CO 81506. A copy of this plan shall be made available upon request. This plan shall be updated with changes and modifications by the SWMP Administrator or someone designated to make changes by them. In addition to this plan the following materials shall also be available for review:

- *BMP Map (with mark-ups to reflect on-site conditions)*
- *Copies of completed Inspection Reports*

This plan and the materials above should be made available to the public for viewing upon request.

1. Site Description

a) The nature of the construction activity at the site. The description should include the physical location and address or cross streets, type of project, a summary of the grading activities, installation of utilities, paving, excavation, landscaping, and the final disposition of the property.

*The proposed **Aspen Village Subdivision** is located at 1062 18 Road on the east side of 18 Road (aka North Pine Street) within the City of Fruita. In more legal terms, it lies at the SW ¼ of the NW ¼ of Section 16, Township 1 North, Range 2 West of the Ute Meridian. The site will be made up of one existing parcel (parcel # 2697-162-00-020).*

Existing development in the area is comprised similar residential subdivisions.

The proposed development will take place on one parcel that is approximately 6.7 acres. The proposed development is zoned ATF.

Construction activities will consist of: installation of perimeter BMPs; rough grading of road, curb, gutter, and sidewalk and installation of detention pond; utility installation (water, sewer, storm drain, and various dry utilities); completion of road, gutter, curb, and sidewalk; rough site grading; landscaping and stabilization of ROW/HOA areas; and construction of homes, finished/fine grading of the lot, and landscaping of the lot.

b) The proposed sequence for major activities. Describe the sequence of events involved in the construction project, such as grading, excavation, final landscaping, etc.

1. *File N.O.I;*
2. *Pre-construction meeting;*
3. *Install perimeter controls (earthen dikes, sediment control logs (wattles), silt fence, filter berms, etc.);*
4. *Access stabilization (vehicle tracking control, surface hardening, etc.);*
5. *Sediment control (rock socks, surface roughening, etc.).*
6. *Storm water controls (earthen dikes and drainage swales, detention pond, etc.);*
7. *Grading (to be phased such that disturbed area is minimized). Install additional controls as required due to phasing, construction methodology, site conditions, etc. (controls include additional perimeter controls, surface roughening, surface hardening, etc.);*
8. *Utility Installation (to be phased with grading and other construction activities);*
9. *Stabilize disturbed areas as soon as possible after construction to prevent erosion (road surfacing, surface roughening, surface hardening, etc.);*
10. *Building construction (relocate controls or install additional controls as necessary);*
11. *Final stabilization (surface hardening (roofs, concrete, & asphalt), landscaping, permanent seeding/planting, etc.);*
12. *Remove temporary BMPs after construction activities are complete and ground cover has been established to 70% of pre-construction conditions via vegetation, landscaping, surface hardening, or a combination there of; and*
13. *File N.O.T.*

c) Estimates of the total area of the site, and the area and location expected to be disturbed by clearing, excavation, grading, or other construction activities.

The parcel is listed as 6.7 acres. The grading should be phased to limit the area of unstabilized disturbance.

Accordingly, the total area disturbed at any one time will likely only be a couple 3-4 acres.

d) A summary of any existing data used in the development of the site construction plans or SWMP that describe the soil or existing potential for soil erosion.

According to the NRCS web site, the soil present at the site consists of Sagers silty clay loam (Bc) (100.0%). This soil is well drained and has a hydrologic soil classification of B (i.e., medium to high infiltration when thoroughly wet and medium to low runoff potential). The Whole Soil K Factor is 0.43. The K factor indicates the susceptibility of a soil to sheet and rill erosion by water. K values range from 0.02 to 0.69 and other factors being equal, the higher the K factor value, the more susceptible the soil is to sheet and rill erosion by water. The site is currently undeveloped and covered consists of bare ground, weeds, and some native vegetation (trees).

e) A description of the existing vegetation at the site and an estimate of the percent vegetative ground cover.

Existing topography at the site consists of grades between 0 and 5 percent. The vegetation on-site consists of fallow grasses, weeds, and a few aspen trees scattered along the southern boundary of the site. Vegetative cover is ~70%.

f) The location and description of all potential pollution sources, including ground surface disturbing activities, vehicle fueling, storage of fertilizers or chemicals, etc.

Pollutant	Potential Sources	BMPs for Pollutant
Sediment	Erosion of exposed soil, dust, drainages, stockpiles, vehicle tracking, etc.	Sediment Control Log, Silt Fence, Earthen Dike, Surface Hardening, Rock Socks, Street Sweeping, etc.
Toxic Chemicals	Poor storage and handling of materials, spills, illegal dumping, pesticide application, etc.	Handling and storage as per Manufacturer's recommendations, Spill Prevention, Control, and Counter Measures
Bacteria	Leaking septic/sewer systems, pet & wildlife waste, illicit connections to storm drain system, etc.	Port-a-potties and bathrooms; Spill Prevention, Control, and Counter Measures
Nutrients	Fertilizers, leaking septic/sewer, decaying plant and animal waste, etc.	Handling, storage, and application as per Manufacturer's recommendations; Spill Prevention, Control, and Counter Measures
Oxygen Demand	Sediment, nutrients, organics, and other pollutants (particulates and soluble)	See BMPs for pollutants above
Fuels, Oils, and Greases	Streets, highways, parking lots, equipment fueling & maintenance, illegal dumping, atmospheric deposition etc.	Spill Prevention, Control, and Counter Measures
Litter/Trash	Human Activities	Good Housekeeping
Metals	Streets, highways, parking lots, building materials, recyclable materials, industrial activities, atmospheric deposition, etc.	Street sweeping, Material Handling and Storage as per Manufacturer's recommendations, Spill Prevention, Control, and Counter Measures
Elevated Water Temperatures	Sunlight, removal of vegetation, impervious areas, shallow storage of water, etc.	Proper maintenance of BMPs
Concrete Wash-out Waste Water	Washing out of concrete trucks and concrete tools (including stucco)	Installation & use of a concrete wash-out area

g) The location and description of any anticipated allowable sources of non-stormwater discharge at the site. (e.g., uncontaminated springs, landscape irrigation return flow, construction dewatering, and concrete washout)

There are no known springs on-site. There is irrigation to the site, but it has not been used for some time. Based on site conditions excavation dewatering is not anticipated. A concrete washout will be installed on-site. The concrete washout will be installed as per the UDFC detail included in this plan, signed, and used as needed by concrete suppliers.
h) The name of the receiving water(s) and the size, type and location of any outfall(s). If the stormwater discharge is to a municipal separate storm sewer system, the name of that system, the location of the storm sewer discharge, and the ultimate receiving water(s).
*The **Aspen Village Subdivision** is within the 5-2-1 Drainage Authority (MS4) boundary and will have two concentrated discharge points for stormwater. The main concentrated discharge point is located in the southwest corner of the site and is the discharge from the on-site detention pond. Discharge from this point is to the City of Fruita's storm drain system in North Pine Street. The second concentrated discharge point is to existing catchbasins along the sub for Laura Avenue. These are also part of the City's storm drain system in North Pine Street. The City's storm sewer system in North Pine Street (aka 18 Road) is part of the Murray Drain. This drain flows south, crosses under I-70 and ultimately discharges to the Colorado River. Discharge to the Colorado River is approximately 2 miles from the proposed project site. There is some un-concentrated stormwater discharge from the site to the north along the existing bike path and to the northwest along North Pine Street. Both of these areas are also tributary to the North Pike Street storm drain.*

2. Site Map

The SWMP must include a site map showing the entire area and identifying the following components:
a) Construction site boundaries;
See construction site boundary shown on map.
b) All areas of ground surface disturbance;
See perimeter controls shown on map.
c) Areas of cut and fill;
See existing and proposed contours on map.
d) Areas used for storage of building materials, equipment, soil, or waste;
These areas have been designated on the map.
e) Locations of dedicated asphalt or concrete batch plants;
None of these facilities will be located on-site for this project.
f) Locations of all structural BMPs;
See map for BMP locations.
g) Locations of non-structural BMPs as applicable; and
See map for BMP locations.
h) Locations of springs, streams, wetlands and other surface waters.
There are no surface waters within or immediately adjacent to this site. See map for outfall locations.

3. Stormwater Management Controls

The SWMP must include a description of all stormwater management controls that will be implemented as part of the construction activity to control pollutants in stormwater discharges. The appropriateness and priorities of stormwater management controls in the SWMP shall reflect the potential pollutant sources identified at the facility. The description of the stormwater management controls shall address the following, at a minimum:

a) SWMP Administrator- The SWMP shall identify a specific individual(s), position, or title who is responsible for developing, implementing, maintaining, and revising the SWMP. The activities and responsibilities of the administrator shall address all aspects of the facility's SWMP.

The SWMP Administrator will be Marc Kenney of River City Consultants, Inc. (Phone: 1-970-241-4722; email: mkenney@rccwest.com).

The SWMP Administrator will be responsible for developing, maintaining, implementing, and revising the SWMP. The SWMP Administrator will have the authority to adequately manage and direct day-to-day stormwater quality management activities at the site and will be a qualified in Erosion and Sediment Control.

b) Identification of Potential Pollution Sources- All potential pollutant sources, including materials and activities, at a site must be evaluated for the potential to contribute pollutants to stormwater discharges. The SWMP shall identify and describe those sources determined to have the potential to contribute pollutants to stormwater discharges, and the sources must be controlled through BMP selection and implementation, as required in paragraph (c) below. At a minimum each of the following sources and activities shall be evaluated for the potential to contribute pollutants to stormwater discharges, and identified in the SWMP if found to have such potential:

Please refer to Section 1.f above. The main pollutant sources for this project are:

1. *Disturbed soil – main potential pollutant sediment – BMPs include, but are not limited to: surface roughening, surface hardening, earthen dike/drainage swale, sediment control logs, silt fence, rock socks, vehicle tracking control, street sweeping, etc.*
2. *Concrete - concrete washout and cleanup waste & wastewater - BMP is the concrete washout*
3. *Trash – worker and project generated trash – BMP is good housekeeping*

1) all disturbed and stored soils;

Please refer to Section 1.f above. Phase grading to minimize the disturbed area at all times. As soon as possible after completion of grading activities, all disturbed areas will be stabilized. Stabilization may be by any of the following: surface hardening (asphalt, concrete, roof, etc.), landscaping, seeding (permanent or temporary), surface roughening, mulching, or other acceptable method (as long as an installation & maintenance detail for said method is added to the appendix of this report).

Disturbed areas of the construction site that will not be re-disturbed for 21 days or more must be stabilized (as noted above) by the 14th day after the last disturbance. If construction is suspended, or sections completed, stabilized areas must be protected to the extent possible. BMPs for stabilized areas include street sweeping, rock socks, inlet protection, sediment control along the back of walk (such as an earthen dike or sediment control log), etc.

Soil and aggregate stockpiles shall have a sediment control BMP on the downslope side. This can include silt fence, earthen dike/drainage swale, or sediment control log. The BMP does not need to be specific to the stockpile, if the stockpile is within perimeter controls then the downstream perimeter controls will suffice. Storage areas should be outside of concentrated drainage pathways to the extent possible.

2) vehicle tracking of sediments;
Please refer to Section 1.f above. *Vehicle tracking control or stabilized entry-ways will be installed at entrances/exits between stabilized and unstabilized areas. A details for the vehicle tracking control and stabilized entry-way BMPs can be found in Appendix C.* *If VTC or SEW are not practical to use or install than another BMP or other BMPs will be used such street cleanup/sweeping. Street cleanup and sweeping may be required even if VTC and SEW are used if significant vehicle tracking of sediments occurs. Street cleanup/sweeping will remove tracked sediment and materials from internal and/or adjacent streets before they come into contact with stormwater or enter the storm drain system. Street cleanup/sweeping should be performed any time visible removable amounts of soil or material is present on the streets. Swept up material shall be properly disposed of at a facility accepting said waste.*
3) management of contaminated soils;
Please refer to Section 1.f above. *All federal (e.g., EPA, OSHA), state, and local regulations and laws apply. Proper training, notification, PPE, procedures, handling, disposal, etc. are the responsibility of the General Contractor. Further it is the General Contractor's responsibility to ensure all sub-contractors are properly trained and follow said rules and regulations (including, but certainly not limited to this plan).* *In the event of a spill the proper authorities shall be notified immediately, work shall stop in the immediate area of the spill, and the MSDS for that material should be consulted for health and safety, containment, and cleanup procedures. The spill will be properly cleaned up by qualified personnel and disposed of properly. A paper trail will document the entire proceeding and all applicable regulations and/or laws will be followed and adhered to.*
4) loading and unloading operations;
Please refer to Section 1.f above. *Loading and unloading shall occur in low traffic areas. Flaggers and spotters should be used as needed or if loading or unloading must be done in an area with traffic. When possible do not work around overhead lines (i.e., power). If working around overhead lines use a spotter. Storage areas should be located outside of concentrated drainage pathways (see BMP Map for locations).*
5) outdoor storage activities (building materials, fertilizers, chemicals, etc.
Please refer to Section 1.f above. *Non-toxic building materials can be stored outside uncovered. Toxic materials (chemicals, paints, fertilizers, etc.) covered storage shall be used whenever possible (i.e., inside of the building under construction or under a tarp) and under the conditions noted on the MSDS and/or by the manufacture. If covered storage is not available then storage shall be in an area where runoff from that area is retained (e.g.., bermed area, or depressed area). All storage areas should be located outside of concentrated drainage pathways.*

6) vehicle and equipment maintenance and fueling;

Prior to site entry equipment shall be cleaned, free of leaks, and in good working condition. Equipment left on-site shall be stored on compacted (mostly) level ground. Prior to leaving the site equipment should be "gross cleaned". Gross cleaning shall include removal of loose and caked on soil or other material prior to loading with a shovel and/or broom.

Fueling of equipment shall occur on compacted level ground. The fueling truck and equipment being fueled shall be blocked and parking brake/lock-out applied during fueling. A spill kit shall be present on the fuel truck at all times when the truck is on-site and the operator of the fuel truck shall be trained and knowledgeable in the spill kits use.

Only minor maintenance (greasing, minor adjustments, etc.) of equipment shall be performed on site. NO maintenance with the potential for a reportable spill is to be conducted on-site. The exception to this rule is fixing a piece of equipment to a point so it can be transported off-site and fixed.

7) significant dust or particulate generating processes;

The Contractor shall have a water truck or other acceptable method available for wetting soils and preventing airborne sediment transport via dust. The water truck does not necessarily need to be on-site, but it must be available to use if it is needed.

8) routine maintenance activities involving fertilizers, pesticides, detergents, fuels, solvents, oils, etc.;

These activities shall follow the SPCC guidelines below. Please note when using the procedure below it is still the Contractor's complete responsibility to ensure compliance with local, State, and Federal Regulations regarding spills, employee training, hazard communication, and health and safety. By using the below procedure, the Contractor implies that they agree to absolve River City Consultants, Inc. of any and all potential liability associated with using said procedures.

Generic SPCC:

1. *Store all materials (hazardous and non-hazardous) according to manufacturer's recommendations and standard practice. This includes toxic chemicals, fertilizers, building materials/supplies, equipment, material stockpiles, etc..*
2. *Keep Material Safety Data Sheets (MSDS's) as required by various regulations.*
3. *Train employees as required by various regulations (e.g., HAZCOMM and spill recognition).*
4. *Upon discovery of a spill:*
    a. *Survey the area for danger. Leave area immediately if a danger or hazard is present or perceived to be present and call 911 from a safe location.*
    b. *Any of the steps below assume there are no dangers or hazards. If a hazard or danger is identified, perceived, or discovered at any point immediately leave the area and get to a safe location/distance and call 911.*
    c. *Identify the source of the spill.*
    d. *Determine if the source and be safely "turned off" or stopped.*
    e. *Do you have the proper training and/or PPE to safely and correctly stop the source of the spill? If no, call 911. If you do then follow proper procedure and stop the source of the spill, then call 911.*
    f. *If it is safe to do so and you have proper training, you may attempt to contain the spill and prevent it from reaching/spreading to any water body, storm drain, or off-site.*
    g. *Notify your supervisor.*
    h. *The supervisor should contact all appropriate agencies and personnel (e.g., Regulators, Cleanup Contractor, Owner/Client, etc.)*
    i. *Any required spill reporting or spill logs should be completed as soon as possible and*

submitted or kept on record as required by regulations.

9) On-site waste management practices (waste piles, liquid wastes, dumpsters, etc.);

See the Good Housekeeping BMP detail in Appendix C.

Re-use and recycle whenever possible. Salvage and recycle bins and/or containers should be used if the supply of recyclable materials warrants their use. Recyclable containers/bins should be covered during non-working hours. Covers will prevent materials from blowing out of the containers and stormwater from contacting the materials within the containers.

Trash containers, dumpsters, and/or roll-offs should be located on-site in easy to access locations. A local company specializing in the collection and disposal of said waste material will be utilized and their responsibilities will include supplying and resupplying the site with containers, removing full containers from the site, proper transport and disposal of waste material to a facility accepting said waste. Trash containers/bins should be covered during non-working hours. Covers will prevent materials from blowing out of the containers and stormwater from contacting the materials within the containers.

Liquid wastes should not be placed in trash containers with "weep holes" that would allow the liquid wastes to leak/spill out of the container and onto the ground. Also do not dispose of liquid wastes down storm drains or via the sanitary sewer. Do dispose of liquid wastes according to Manufacture's recommendations acceptable standard practice, and all local, state, and federal regulations.

The Contractor shall perform good housekeeping practices. Garbage and construction waste shall be cleaned up and disposed of on a regular basis (at least once a week). If garbage or construction debris is blown off-site during a windy day it is the Contractor's responsibility to retrieve and dispose of said materials.

Port-a-potties for human waste will be located on-site as shown on the BMP Map. These will be provided and maintained by a local company specializing in the port-a-potty business. Their responsibilities will include supply, cleaning, and maintenance of the port-a-potties, and proper disposal to a facility accepting said waste. Port-a-potties shall be staked or otherwise secured to prevent accidental tipping due to wind or other cause.

10) concrete truck/equipment washing, including concrete truck chute and associated fixtures and equipment;

A concrete washout shall be installed on-site as shown on the BMP Map. Installation shall be as per the detail in Appendix C. Note: Concrete washout water shall not be discharged to state surface waters or to storm sewer systems. On-site permanent disposal of concrete washout waste is not authorized. Discharge to the ground of concrete washout waste (in the designated concrete washout area) that will subsequently be disposed of off-site is authorized. See Part I.D.3.c of the Colorado Stormwater Discharge Permit.

11) dedicated asphalt and concrete batch plants;

No asphalt or concrete batch plants will be built on-site for this project.

12) non-industrial waste sources such as worker trash and portable toilets;

Please refer to 3.b.9 above.

13) other areas or procedures where potential spills can occur.

Please refer to 3.b.8 above.

If present, Driller's mud for foundation piles can be placed within the foundation excavation as long as the excavation is depressed and will contain said waters (i.e., they cannot leave the foundation excavation area). Driller's mud can be discharged to the concrete washout. Driller's mud cannot be discharged directly to the ground outside of the limits of the foundation excavation.

c) <u>Best Management Practices.</u> The SWMP shall identify and describe appropriate BMPs, including, but not limited to, those required by paragraphs 1 through 8 below, that will be implemented at the facility to reduce the potential of the sources identified in part b, above, to contribute pollutants to stormwater discharges. The SWMP shall clearly describe the installation and implementation specifications for each BMP identified in the SWMP to ensure proper implementation, operation, and maintenance of the BMP.

1. <u>Structural Practices for Erosion Control</u>. The SWMP shall clearly describe and locate all structural practices implemented at the site to minimize erosion and sediment transport. Practices may include, but are not limited to: straw bales, wattles/sediment control logs, silt fences, earth dikes, drainage swales, sediment traps, subsurface drains, pipe slope drains, inlet protection, outlet protection, gabions, and temporary or permanent sediment basins.

Please refer to the BMP Map in Appendix A of this plan. Appendix C of this plan contains the installation details for all of the BMPs listed within the report and on the BMP Map.

<u>CSWM Plan Enhancement</u>
This plan is intended to be a "living document" and it is expected that it will be modified and updated throughout the project. The purpose of these changes is to continuously improve and tailor the plan to the project. These modifications/updates will be documented in writing within the copy of the original plan located on-site. If alternate BMPs are used details for said BMPs should be added to Appendix C. At all times the BMP Map on-site shall be "redlined" to represent the current practices being used. The SWMP Administrator will be the person responsible for documenting any changes and keeping the documents up to date and current with field activities.

2) <u>Non-Structural Practices for Erosion and Sediment Control</u>. The SWMP shall clearly describe and locate, as applicable, all non-structural practices implemented at the site to minimize erosion and sediment transport. Description must include interim and permanent stabilization practices, and site-specific scheduling for implementation of the practices. The SWMP should include practices to ensure that existing vegetation is preserved where possible. Non-structural practices may include, but are not limited to: temporary vegetation, permanent vegetation, mulching, geotextiles, sod stabilization, slope roughening, vegetative buffer strips, protection of trees, and preservation of mature vegetation.

Please refer to the BMP Map in Appendix A of this plan. Appendix C of this plan contains the installation details for all of the BMPs listed within the report and on the BMP Map.

<u>Education/Training</u>
The purpose of this plan is not to hinder or interfere with the progression of work on this project, but instead to improve, complement, and enhance the overall outcome of this project. People working on-site are encouraged to read this plan. These workers may have suggestions based on their experience at other sites and projects. These suggestions should be brought to the attention of the SWMP Administrator, who may (at their discretion) modify this plan accordingly.

3) <u>Phased BMP Implementation:</u> The SWMP shall clearly describe the relationship between the phases of construction, and the implementation and maintenance of both structural and non-structural stormwater management controls. The SWMP must identify the stormwater management controls to be implemented during the project phases, which can include, but are not limited to, clearing and grubbing; road construction; utility and infrastructure installation; vertical construction; final grading; and final stabilization.

Stormwater pollution prevention measures can be categorized as follows:

1. *Preventing contact between stormwater and the pollutant.*
2. *Preventing transport of the pollutant by stormwater.*
3. *Treatment to remove pollutants from stormwater.*

These measures are listed in order according to effectiveness and priority. Obviously if the stormwater does not come into contact with a pollutant, it cannot become contaminated with the pollutant. Second, if the stormwater contacts the pollutant and the pollutant does not suspend or dissolve into the stormwater, the stormwater will remain uncontaminated. The best way to protect the soil surface and limit erosion is to preserve existing vegetative cover. Unfortunately, even with our best efforts stormwater will likely become contaminated with pollutants from the site. This is because by nature of the project portions of the site will be disturbed. Accordingly, efforts will be put in place to facilitate the removal of some of these pollutants from stormwater. This is especially true prior to discharge from the site, but most effective if done in series to ensure the pollutant levels never reach high levels and so the perimeter controls are not the only defense, but instead the last line of defense.

The construction activities will be structured to minimize the total area disturbed at any one time. Perimeter and outfalls BMPs, access stabilization will be installed prior to soil disturbance. Internal sediment and stormwater controls will be installed as grading and disturbance activities proceed. These internal controls will be shifted as new areas are disturbed and other areas are stabilized. It will be the SWMP Administrator's job/responsibility to document any changes to the location and type of BMPs used and to keep this plan up to date.

4) <u>Materials Handling and Spill Prevention.</u> The SWMP shall clearly describe and locate all practices implemented at the site to minimize impacts from procedures or significant materials that could contribute pollutants to runoff. Such procedures or significant materials could include: exposed storage of building materials; paints and solvents; fertilizers or chemicals; waste material; and equipment maintenance or fueling procedures. Areas or procedures where potential spills can occur <u>must</u> have spill prevention and response procedures identified in the SWMP.

As previously stated, materials will be handled according to their MSDS sheets and/or Manufacturer's recommendations. The Contractor should have a Spill Prevention, Control, and Countermeasure Plan (SPCC Plan). Please refer to Section 3.b.8 for generic Spill Prevention, Control, and Countermeasures in the absence of said plan. Please refer to the procedures described in Section 3.b and other areas of this report for the specifics of dealing with potential contaminates on this site.

5) <u>Dedicated Concrete or Asphalt Batch Plants.</u> The SWMP shall clearly describe and locate all practices implemented at the site to control stormwater pollution from dedicated concrete batch plants or dedicated asphalt batch plants covered by this certification.

No concrete or asphalt batch plants will be implemented at the site.

6) <u>Vehicle Tracking Control</u>. The SWMP shall clearly describe and locate all practices implemented at the site to control potential sediment discharges from vehicle tracking. Practices must be implemented for all areas of potential vehicle tracking, and can include: minimizing site access; street sweeping or scraping; tracking pads; graveled parking areas; requiring that vehicles stay on paved areas on-site; wash racks; contractor education; and/or sediment control BMPs, etc.

Vehicle tracking control will be installed at entrances/exits between stabilized and unstabilized areas when

possible or practical. A detail for the vehicle tracking control can be found in Appendix C. If VTC is not practical than an alternate BMP must be used such as stabilized entry-way or street sweeping/cleaning. Even with the use of VTC street sweeping may be required if significant vehicle tracking of sediments occurs. Street Sweeping will remove tracked sediment and materials from internal and/or adjacent streets before they come into contact with stormwater or enter the storm drain system. Street sweeping should be performed any time visible amounts of soil or material is present on the streets. Swept up material shall be placed in a waste container and properly disposed of at a facility accepting said waste.
7) <u>Waste Management and Disposal, Including Concrete Washout.</u> The SWMP shall clearly describe and locate the practices implemented at the site to control stormwater pollution from <u>all</u> construction site wastes (liquid and solid), including concrete washout activities. The practices used for concrete washout must ensure that these activities do not result in the contribution of pollutants associated with the washing activity to stormwater runoff. The SWMP shall clearly describe and locate the practices to be used that will ensure that no washout water from concrete washout activities is discharged from the site as surface runoff or to surface waters.
Please refer to Section 3.b.9 above for waste management and 3.b.10 for the concrete washout. Locations of these BMPs are shown on the BMP Map.
8) <u>Groundwater and Stormwater Dewatering</u>. The SWMP shall clearly describe and locate the practices implemented at the site to control stormwater pollution from the dewatering of groundwater or stormwater from excavations, wells, etc. Part I.D.3.d of the permit authorizes the conditional discharge of construction dewatering to the ground. For any construction dewatering of groundwater not authorized under a separate CDPS discharge permit, the SWMP shall clearly describe and locate the practices to be used that will ensure that no groundwater from construction dewatering is discharged from the site as surface runoff or to surface waters.
Groundwater is not anticipated to be an issue at this site. If groundwater does become an issue, the SWMP Administrator will modify this plan to address groundwater dewatering in compliance with all associated regulations. Stormwater dewatering of excavations will be conducted according to the detail in Appendix C.

4. Final Stabilization and Long-term Stormwater Management

a) The SWMP shall clearly describe the practices used to achieve final stabilization of all disturbed areas at the site, and any planned practices to control pollutants in stormwater discharges that will occur after construction operations have been completed at the site. b) Final stabilization practices for obtaining a vegetative cover should include, as appropriate: seed mix selection and application methods; soil preparation and amendments; soil stabilization practices (e.g. crimped straw, hydro mulch or rolled erosion control products); and appropriate sediment control BMPs as needed until final stabilization is achieved; etc.
Final stabilization and ground cover will include: asphalt, concrete, buildings (i.e. roof), lawn, and landscaped areas. Landscaped areas cover types include grass, gardens, shrubs, etc.. Final stabilization will be considered achieved when the area has been stabilized to 70% of pre-disturbed levels (i.e., 70% of 50% ground cover). *Sediment that collects within the site's drainage system and water quality or quantity controls (BMPs) during this period is also considered unstabilized soil, and must be removed and the area stabilized before the site is considered finally stabilized. Procedures for accomplishing this include spreading the sediment over areas to be vegetated and placing the vegetation (e.g. sod) on top of the material, or spreading seed and mulch over the material.*
c) Final stabilization is reached when all ground surface disturbing activities at the site have been completed, and uniform vegetative cover has been established within an individual plant density of at least 70 percent of pre-disturbance levels, or equivalent permanent, physical erosion reduction methods have been employed.
Agreed.

5. Inspection and Maintenance Procedures

a) The SWMP shall clearly describe the inspection and maintenance procedures implemented at the site to maintain all erosion and sediment control practices and other protective practices identified in the SWMP, in good and effective operation condition.

Minimum Inspection Schedule*: The permittee shall, at a minimum, make a thorough inspection, in accordance with the requirements in I.D.6.b below, at least once every 14 calendar days. Also, post-storm event inspections must be conducted within 24 hours after the end of any precipitation or snowmelt event that causes surface erosion. Provided the timing is appropriate, the post-storm inspections may be used to fulfill the 14-day routine inspection requirement.*

The following conditional modifications to this Minimum Inspection Schedule are allowed:

1) *Post-Storm Event Inspections at Temporarily Idle Sites – If no construction activities will occur following a storm event, post-storm event inspections shall be conducted prior to re-commencing construction activities, but no later than 72 hours following the storm event. The occurrence of any such delayed inspection must be documented in the inspection record. Routine inspections still must be conducted at least every 14 calendar days.*
2) *Inspections at Completed Sites/Areas – For sites or portions of sites that meet the following criteria, but final stabilization has not been achieved due to a vegetative cover that has not become established, the permittee shall make a thorough inspection of their stormwater management system at least once every month, and post-storm event inspections are not required. This reduced inspection schedule is only allowed if:*
   i) all construction activities that will result in surface ground disturbance are completed;
   j) all activities required for final stabilization, in accordance with the SWMP, have been completed, with the exception of the application of seed that has not occurred due to seasonal conditions or the necessity for additional seed application to augment previous efforts; and
   k) the SWMP has been amended to indicate those areas that will be inspected in accordance with the reduced schedule allowed for in this paragraph.
3) *Winter Conditions Inspections Exclusion – Inspections are not required at sites where construction activities are temporarily halted, snow cover exists over the entire site for an extended period, and melting conditions posing a risk of surface erosion do not exist. This exception is applicable only during the period where melting conditions do not exist, and applies to the routine 14-day and monthly inspections, as well as the post-storm event inspections. The following information must be documented in the inspection record for use of this exclusion: dates when snow cover occurred, date when construction activities ceased, and date melting conditions began. Inspections, as described above, are required at all other times.*

Inspection Scope *- The construction site perimeter, all disturbed areas, material and/or waste storage areas that are exposed to precipitation, discharge locations, and locations where vehicles access the site shall be inspected for evidence of, or the potential for, pollutants leaving the construction site boundaries, entering the stormwater drainage system, or discharging to state waters. All erosion and sediment control practices identified in the SWMP shall be evaluated to ensure that they are maintained and operating correctly.*

Inspection Report Form*:*

While the inspection reports can take many different forms, it is important to note that they must provide adequate space or be filled out electronically (so text boxes can expand as needed) for an adequate inspection report, which must include, at a minimum:

i) The inspection date;
ii) Name(s) and title(s) of personnel making the inspection;
iii) Location(s) of discharges of sediment or other pollutants from the site;
iv) Location(s) of BMPs that need to be maintained;
v) Location(s) of BMPs that failed to operate as designed or proved inadequate for a particular location;

vi) Location(s) where additional BMPs are needed that were not in place at the time of inspection;
vii) Deviations from the minimum inspection schedule as provided in Part I.D.6.a above;
vii) Description of corrective action for items iii, iv, v, and vi, above, dates corrective action(s) taken, and measures taken to prevent future violations, including requisite changes to the SWMP, as necessary; and
viii) After adequate corrective action(s) has been taken, or where a report does not identify any incidents requiring corrective action, the report shall contain a signed statement indicating the site is in compliance with the permit to the best of the signer's knowledge and belief.

The 521 Drainage Authority has developed an inspection form that meets the above requirements and is included in Appendix B of this report. The Inspector is to use this form as a template and modify it based on the current phase of construction and BMPs in the field.

***Required Actions Following Site Inspections** – Where site inspections note the need for BMP maintenance activities, BMPs must be maintained in accordance with the SWMP and Part I.D.7 of the permit. Repair, replacement, or installation of new BMPs determined necessary during site inspections to address ineffective or inadequate BMPs must be conducted in accordance with Part I.D.8 of the permit. SWMP updates required as a result of deficiencies in the SWMP noted during site inspections shall be made in accordance with Part I.D.5.c of the permit.*

BMP Maintenance
Maintenance triggers and procedures for maintaining each BMP on the project are include within the detail sheets for each BMP in Appendix C. The SWMP Administrator, CSWMP Inspector, and the Contractor's maintenance crew shall familiarize themselves with these details and the information provided.

If the CSWMP Inspector identifies BMP maintenance needs, they will submit a work order to the SWMP Administrator. After the contractor performs the work the SWMP Administrator will notify the Inspector, who will verify and document the date of completion on the inspection report.

a) Provide a description of the procedures for preventive maintenance.
Preventive maintenance, which must be done according to the specifications of the maintenance details of each BMP included in the Structural and Non-Structural BMP section of this permit; note that these details include tolerances, or levels which sediment must not be allowed to accumulate past, which must be maintained.

<u>CSWM Plan Enhancement</u>
This plan is intended to be a "living document" and it is expected that it will be modified and updated throughout the project. The purpose of these changes is to continuously improve and tailor the plan to the project. These modifications/updates will be documented in writing within the copy of the original plan located on-site. If alternate BMPs are used details for said BMPs should be added to Appendix C. At all times the BMP Map on-site shall be "redlined" to represent the current practices being used. The SWMP Administrator will be the person responsible for documenting any changes and keeping the documents up to date and current with field activities.

Appendix A

BMP Map

Good Housekeeping Practices (GH) MM-3

Description

Implement construction site good housekeeping practices to prevent pollution associated with solid, liquid and hazardous construction-related materials and wastes. Stormwater Management Plans (SWMPs) should clearly specify BMPs including these good housekeeping practices:

- Provide for waste management.
- Establish proper building material staging areas.
- Designate paint and concrete washout areas.
- Establish proper equipment/vehicle fueling and maintenance practices.
- Control equipment/vehicle washing and allowable non-stormwater discharges.
- Develop a spill prevention and response plan.

Acknowledgement: This Fact Sheet is based directly on EPA guidance provided in *Developing Your Stormwater Pollution Prevent Plan* (EPA 2007).

Photographs GH-1 and GH-2. Proper materials storage and secondary containment for fuel tanks are important good housekeeping practices. Photos courtesy of CDOT and City of Aurora.

Appropriate Uses

Good housekeeping practices are necessary at all construction sites.

Design and Installation

The following principles and actions should be addressed in SWMPs:

- **Provide for Waste Management.** Implement management procedures and practices to prevent or reduce the exposure and transport of pollutants in stormwater from solid, liquid and sanitary wastes that will be generated at the site. Practices such as trash disposal, recycling, proper material handling, and cleanup measures can reduce the potential for stormwater runoff to pick up construction site wastes and discharge them to surface waters. Implement a comprehensive set of waste-management practices for hazardous or toxic materials, such as paints, solvents, petroleum products, pesticides, wood preservatives, acids, roofing tar, and other materials. Practices should include storage, handling, inventory, and cleanup procedures, in case of spills. Specific practices that should be considered include:

Solid or Construction Waste

- Designate trash and bulk waste-collection areas on-site.

Good Housekeeping	
Functions	
Erosion Control	No
Sediment Control	No
Site/Material Management	Yes

- Recycle materials whenever possible (e.g., paper, wood, concrete, oil).
- Segregate and provide proper disposal options for hazardous material wastes.
- Clean up litter and debris from the construction site daily.
- Locate waste-collection areas away from streets, gutters, watercourses, and storm drains. Waste-collection areas (dumpsters, and such) are often best located near construction site entrances to minimize traffic on disturbed soils. Consider secondary containment around waste collection areas to minimize the likelihood of contaminated discharges.
- Empty waste containers before they are full and overflowing.

Sanitary and Septic Waste

- Provide convenient, well-maintained, and properly located toilet facilities on-site.
- Locate toilet facilities away from storm drain inlets and waterways to prevent accidental spills and contamination of stormwater.
- Maintain clean restroom facilities and empty portable toilets regularly.
- Where possible, provide secondary containment pans under portable toilets.
- Provide tie-downs or stake-downs for portable toilets.
- Educate employees, subcontractors, and suppliers on locations of facilities.
- Treat or dispose of sanitary and septic waste in accordance with state or local regulations. Do not discharge or bury wastewater at the construction site.
- Inspect facilities for leaks. If found, repair or replace immediately.
- Special care is necessary during maintenance (pump out) to ensure that waste and/or biocide are not spilled on the ground.

Hazardous Materials and Wastes

- Develop and implement employee and subcontractor education, as needed, on hazardous and toxic waste handling, storage, disposal, and cleanup.
- Designate hazardous waste-collection areas on-site.
- Place all hazardous and toxic material wastes in secondary containment.

Photograph GH-3. Locate portable toilet facilities on level surfaces away from waterways and storm drains. Photo courtesy of WWE.

- Hazardous waste containers should be inspected to ensure that all containers are labeled properly and that no leaks are present.

- **Establish Proper Building Material Handling and Staging Areas**. The SWMP should include comprehensive handling and management procedures for building materials, especially those that are hazardous or toxic. Paints, solvents, pesticides, fuels and oils, other hazardous materials or building materials that have the potential to contaminate stormwater should be stored indoors or under cover whenever possible or in areas with secondary containment. Secondary containment measures prevent a spill from spreading across the site and may include dikes, berms, curbing, or other containment methods. Secondary containment techniques should also ensure the protection of groundwater. Designate staging areas for activities such as fueling vehicles, mixing paints, plaster, mortar, and other potential pollutants. Designated staging areas enable easier monitoring of the use of materials and clean up of spills. Training employees and subcontractors is essential to the success of this pollution prevention principle. Consider the following specific materials handling and staging practices:

  - Train employees and subcontractors in proper handling and storage practices.

  - Clearly designate site areas for staging and storage with signs and on construction drawings. Staging areas should be located in areas central to the construction site. Segment the staging area into sub-areas designated for vehicles, equipment, or stockpiles. Construction entrances and exits should be clearly marked so that delivery vehicles enter/exit through stabilized areas with vehicle tracking controls (See Vehicle Tracking Control Fact Sheet).

  - Provide storage in accordance with Spill Protection, Control and Countermeasures (SPCC) requirements and plans and provide cover and impermeable perimeter control, as necessary, for hazardous materials and contaminated soils that must be stored on site.

  - Ensure that storage containers are regularly inspected for leaks, corrosion, support or foundation failure, or other signs of deterioration and tested for soundness.

  - Reuse and recycle construction materials when possible.

- **Designate Concrete Washout Areas**. Concrete contractors should be encouraged to use the washout facilities at their own plants or dispatch facilities when feasible; however, concrete washout commonly occurs on construction sites. If it is necessary to provide for concrete washout areas on-site, designate specific washout areas and design facilities to handle anticipated washout water. Washout areas should also be provided for paint and stucco operations. Because washout areas can be a source of pollutants from leaks or spills, care must be taken with regard to their placement and proper use. See the Concrete Washout Area Fact Sheet for detailed guidance.

  Both self-constructed and prefabricated washout containers can fill up quickly when concrete, paint, and stucco work are occurring on large portions of the site. Be sure to check for evidence that contractors are using the washout areas and not dumping materials onto the ground or into drainage facilities. If the washout areas are not being used regularly, consider posting additional signage, relocating the facilities to more convenient locations, or providing training to workers and contractors.

  When concrete, paint, or stucco is part of the construction process, consider these practices which will help prevent contamination of stormwater. Include the locations of these areas and the maintenance and inspection procedures in the SWMP.

- Do not washout concrete trucks or equipment into storm drains, streets, gutters, uncontained areas, or streams. Only use designated washout areas.
- Establish washout areas and advertise their locations with signs. Ensure that signage remains in good repair.
- Provide adequate containment for the amount of wash water that will be used.
- Inspect washout structures daily to detect leaks or tears and to identify when materials need to be removed.
- Dispose of materials properly. The preferred method is to allow the water to evaporate and to recycle the hardened concrete. Full service companies may provide dewatering services and should dispose of wastewater properly. Concrete wash water can be highly polluted. It should not be discharged to any surface water, storm sewer system, or allowed to infiltrate into the ground in the vicinity of waterbodies. Washwater should not be discharged to a sanitary sewer system without first receiving written permission from the system operator.

- **Establish Proper Equipment/Vehicle Fueling and Maintenance Practices**. Create a clearly designated on-site fueling and maintenance area that is clean and dry. The on-site fueling area should have a spill kit, and staff should know how to use it. If possible, conduct vehicle fueling and maintenance activities in a covered area. Consider the following practices to help prevent the discharge of pollutants to stormwater from equipment/vehicle fueling and maintenance. Include the locations of designated fueling and maintenance areas and inspection and maintenance procedures in the SWMP.
  - Train employees and subcontractors in proper fueling procedures (stay with vehicles during fueling, proper use of pumps, emergency shutoff valves, etc.).
  - Inspect on-site vehicles and equipment regularly for leaks, equipment damage, and other service problems.
  - Clearly designate vehicle/equipment service areas away from drainage facilities and watercourses to prevent stormwater run-on and runoff.
  - Use drip pans, drip cloths, or absorbent pads when replacing spent fluids.
  - Collect all spent fluids, store in appropriate labeled containers in the proper storage areas, and recycle fluids whenever possible.

- **Control Equipment/Vehicle Washing and Allowable Non-Stormwater Discharges.** Implement practices to prevent contamination of surface and groundwater from equipment and vehicle wash water. Representative practices include:
  - Educate employees and subcontractors on proper washing procedures.
  - Use off-site washing facilities, when available.
  - Clearly mark the washing areas and inform workers that all washing must occur in this area.
  - Contain wash water and treat it using BMPs. Infiltrate washwater when possible, but maintain separation from drainage paths and waterbodies.

- Use high-pressure water spray at vehicle washing facilities without detergents. Water alone can remove most dirt adequately.
- Do not conduct other activities, such as vehicle repairs, in the wash area.
- Include the location of the washing facilities and the inspection and maintenance procedures in the SWMP.

- **Develop a Spill Prevention and Response Plan.** Spill prevention and response procedures must be identified in the SWMP. Representative procedures include identifying ways to reduce the chance of spills, stop the source of spills, contain and clean up spills, dispose of materials contaminated by spills, and train personnel responsible for spill prevention and response. The plan should also specify material handling procedures and storage requirements and ensure that clear and concise spill cleanup procedures are provided and posted for areas in which spills may potentially occur. When developing a spill prevention plan, include the following:
  - Note the locations of chemical storage areas, storm drains, tributary drainage areas, surface waterbodies on or near the site, and measures to stop spills from leaving the site.
  - Provide proper handling and safety procedures for each type of waste. Keep Material Safety Data Sheets (MSDSs) for chemical used on site with the SWMP.
  - Establish an education program for employees and subcontractors on the potential hazards to humans and the environment from spills and leaks.
  - Specify how to notify appropriate authorities, such as police and fire departments, hospitals, or municipal sewage treatment facilities to request assistance. Emergency procedures and contact numbers should be provided in the SWMP and posted at storage locations.
  - Describe the procedures, equipment and materials for immediate cleanup of spills and proper disposal.
  - Identify personnel responsible for implementing the plan in the event of a spill. Update the spill prevention plan and clean up materials as changes occur to the types of chemicals stored and used at the facility.

Spill Prevention, Control, and Countermeasure (SPCC) Plan

Construction sites may be subject to 40 CFR Part 112 regulations that require the preparation and implementation of a SPCC Plan to prevent oil spills from aboveground and underground storage tanks. The facility is subject to this rule if it is a non-transportation-related facility that:

- Has a total storage capacity greater than 1,320 gallons or a completely buried storage capacity greater than 42,000 gallons.
- Could reasonably be expected to discharge oil in quantities that may be harmful to navigable waters of the United States and adjoining shorelines.

Furthermore, if the facility is subject to 40 CFR Part 112, the SWMP should reference the SPCC Plan. To find out more about SPCC Plans, see EPA's website on SPPC at www.epa.gov/oilspill/spcc.htm.

Reporting Oil Spills

In the event of an oil spill, contact the National Response Center toll free at 1-800-424- 8802 for assistance, or for more details, visit their website: www.nrc.uscg.mil.

Maintenance and Removal

Effective implementation of good housekeeping practices is dependent on clear designation of personnel responsible for supervising and implementing good housekeeping programs, such as site cleanup and disposal of trash and debris, hazardous material management and disposal, vehicle and equipment maintenance, and other practices. Emergency response "drills" may aid in emergency preparedness.

Checklists may be helpful in good housekeeping efforts.

Staging and storage areas require permanent stabilization when the areas are no longer being used for construction-related activities.

Construction-related materials, debris and waste must be removed from the construction site once construction is complete.

Design Details

See the following Fact Sheets for related Design Details:

MM-1 Concrete Washout Area

MM-2 Stockpile Management

SM-4 Vehicle Tracking Control

Design details are not necessary for other good housekeeping practices; however, be sure to designate where specific practices will occur on the appropriate construction drawings.

Silt Fence (SF) SC-1

Description

A silt fence is a woven geotextile fabric attached to wooden posts and trenched into the ground. It is designed as a sediment barrier to intercept sheet flow runoff from disturbed areas.

Photograph SF-1. Silt fence creates a sediment barrier, forcing sheet flow runoff to evaporate or infiltrate.

Appropriate Uses

A silt fence can be used where runoff is conveyed from a disturbed area as sheet flow. Silt fence is not designed to receive concentrated flow or to be used as a filter fabric. Typical uses include:

- Down slope of a disturbed area to accept sheet flow.
- Along the perimeter of a receiving water such as a stream, pond or wetland.
- At the perimeter of a construction site.

Design and Installation

Silt fence should be installed along the contour of slopes so that it intercepts sheet flow. The maximum recommended tributary drainage area per 100 lineal feet of silt fence, installed along the contour, is approximately 0.25 acres with a disturbed slope length of up to 150 feet and a tributary slope gradient no steeper than 3:1. Longer and steeper slopes require additional measures. This recommendation only applies to silt fence installed along the contour. Silt fence installed for other uses, such as perimeter control, should be installed in a way that will not produce concentrated flows. For example, a "J-hook" installation may be appropriate to force runoff to pond and evaporate or infiltrate in multiple areas rather than concentrate and cause erosive conditions parallel to the silt fence.

See Detail SF-1 for proper silt fence installation, which involves proper trenching, staking, securing the fabric to the stakes, and backfilling the silt fence. Properly installed silt fence should not be easily pulled out by hand and there should be no gaps between the ground and the fabric.

Silt fence must meet the minimum allowable strength requirements, depth of installation requirement, and other specifications in the design details. Improper installation of silt fence is a common reason for silt fence failure; however, when properly installed and used for the appropriate purposes, it can be highly effective.

Silt Fence	
Functions	
Erosion Control	No
Sediment Control	Yes
Site/Material Management	No

Maintenance and Removal

Inspection of silt fence includes observing the material for tears or holes and checking for slumping fence and undercut areas bypassing flows. Repair of silt fence typically involves replacing the damaged section with a new section. Sediment accumulated behind silt fence should be removed, as needed to maintain BMP effectiveness, typically before it reaches a depth of 6 inches.

Silt fence may be removed when the upstream area has reached final stabilization.

Photograph SF-2. When silt fence is not installed along the contour, a "J-hook" installation may be appropriate to ensure that the BMP does not create concentrated flow parallel to the silt fence. Photo courtesy of Tom Gore.

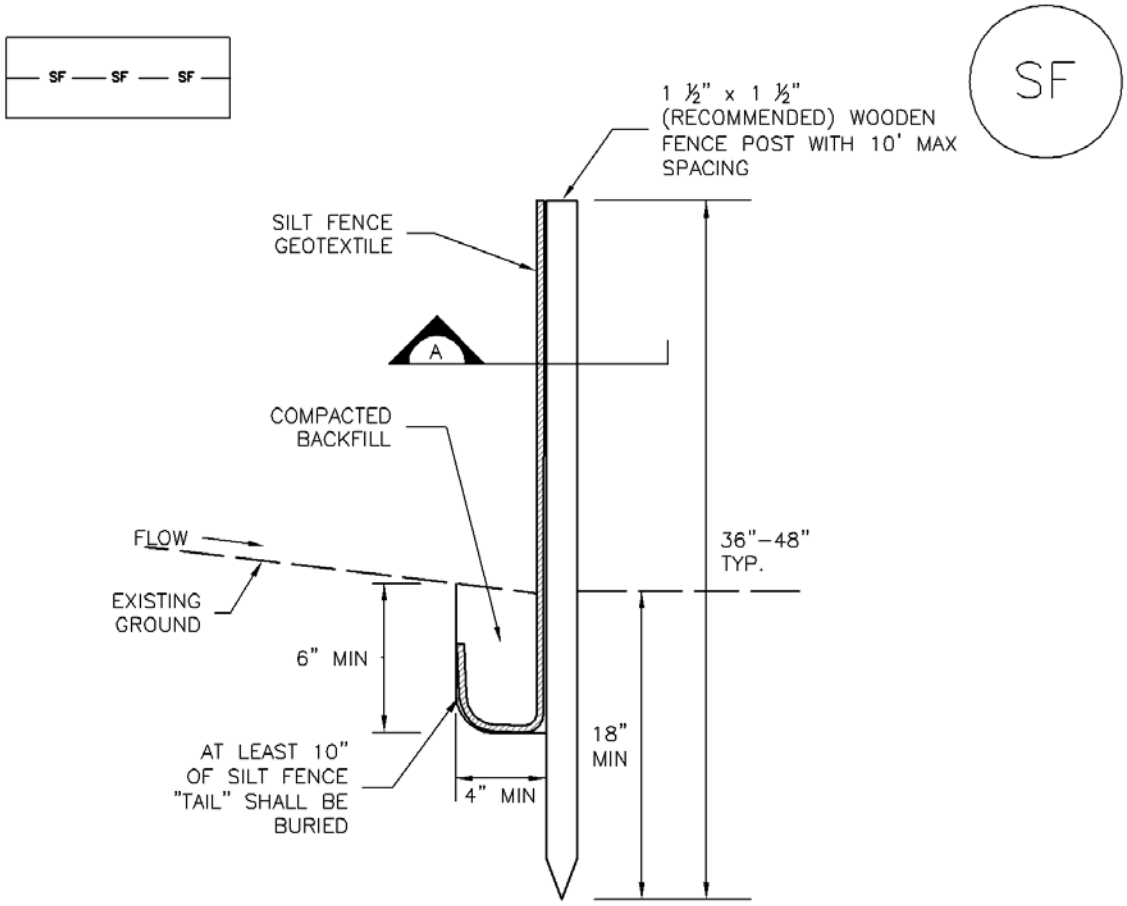

SILT FENCE

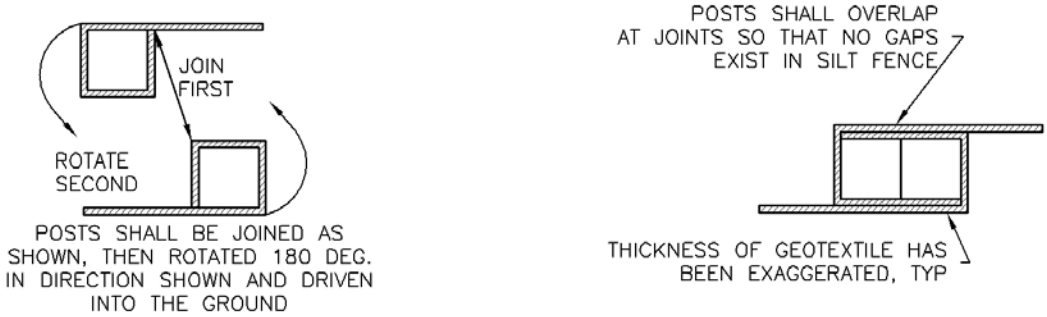

SECTION A

SF–1. SILT FENCE

SILT FENCE INSTALLATION NOTES

1. SILT FENCE MUST BE PLACED AWAY FROM THE TOE OF THE SLOPE TO ALLOW FOR WATER PONDING. SILT FENCE AT THE TOE OF A SLOPE SHOULD BE INSTALLED IN A FLAT LOCATION AT LEAST SEVERAL FEET (2–5 FT) FROM THE TOE OF THE SLOPE TO ALLOW ROOM FOR PONDING AND DEPOSITION.

2. A UNIFORM 6" X 4" ANCHOR TRENCH SHALL BE EXCAVATED USING TRENCHER OR SILT FENCE INSTALLATION DEVICE. NO ROAD GRADERS, BACKHOES, OR SIMILAR EQUIPMENT SHALL BE USED.

3. COMPACT ANCHOR TRENCH BY HAND WITH A "JUMPING JACK" OR BY WHEEL ROLLING. COMPACTION SHALL BE SUCH THAT SILT FENCE RESISTS BEING PULLED OUT OF ANCHOR TRENCH BY HAND.

4. SILT FENCE SHALL BE PULLED TIGHT AS IT IS ANCHORED TO THE STAKES. THERE SHOULD BE NO NOTICEABLE SAG BETWEEN STAKES AFTER IT HAS BEEN ANCHORED TO THE STAKES.

5. SILT FENCE FABRIC SHALL BE ANCHORED TO THE STAKES USING 1" HEAVY DUTY STAPLES OR NAILS WITH 1" HEADS. STAPLES AND NAILS SHOULD BE PLACED 3" ALONG THE FABRIC DOWN THE STAKE.

6. AT THE END OF A RUN OF SILT FENCE ALONG A CONTOUR, THE SILT FENCE SHOULD BE TURNED PERPENDICULAR TO THE CONTOUR TO CREATE A "J–HOOK." THE "J–HOOK" EXTENDING PERPENDICULAR TO THE CONTOUR SHOULD BE OF SUFFICIENT LENGTH TO KEEP RUNOFF FROM FLOWING AROUND THE END OF THE SILT FENCE (TYPICALLY 10' – 20').

7. SILT FENCE SHALL BE INSTALLED PRIOR TO ANY LAND DISTURBING ACTIVITIES.

SILT FENCE MAINTENANCE NOTES

1. INSPECT BMPs EACH WORKDAY, AND MAINTAIN THEM IN EFFECTIVE OPERATING CONDITION. MAINTENANCE OF BMPs SHOULD BE PROACTIVE, NOT REACTIVE. INSPECT BMPs AS SOON AS POSSIBLE (AND ALWAYS WITHIN 24 HOURS) FOLLOWING A STORM THAT CAUSES SURFACE EROSION, AND PERFORM NECESSARY MAINTENANCE.

2. FREQUENT OBSERVATIONS AND MAINTENANCE ARE NECESSARY TO MAINTAIN BMPs IN EFFECTIVE OPERATING CONDITION. INSPECTIONS AND CORRECTIVE MEASURES SHOULD BE DOCUMENTED THOROUGHLY.

3. WHERE BMPs HAVE FAILED, REPAIR OR REPLACEMENT SHOULD BE INITIATED UPON DISCOVERY OF THE FAILURE.

4. SEDIMENT ACCUMULATED UPSTREAM OF THE SILT FENCE SHALL BE REMOVED AS NEEDED TO MAINTAIN THE FUNCTIONALITY OF THE BMP, TYPICALLY WHEN DEPTH OF ACCUMULATED SEDIMENTS IS APPROXIMATELY 6".

5. REPAIR OR REPLACE SILT FENCE WHEN THERE ARE SIGNS OF WEAR, SUCH AS SAGGING, TEARING, OR COLLAPSE.

6. SILT FENCE IS TO REMAIN IN PLACE UNTIL THE UPSTREAM DISTURBED AREA IS STABILIZED AND APPROVED BY THE LOCAL JURISDICTION, OR IS REPLACED BY AN EQUIVALENT PERIMETER SEDIMENT CONTROL BMP.

7. WHEN SILT FENCE IS REMOVED, ALL DISTURBED AREAS SHALL BE COVERED WITH TOPSOIL, SEEDED AND MULCHED OR OTHERWISE STABILIZED AS APPROVED BY LOCAL JURISDICTION.

(DETAIL ADAPTED FROM TOWN OF PARKER, COLORADO AND CITY OF AURORA, NOT AVAILABLE IN AUTOCAD)

NOTE: MANY JURISDICTIONS HAVE BMP DETAILS THAT VARY FROM UDFCD STANDARD DETAILS. CONSULT WITH LOCAL JURISDICTIONS AS TO WHICH DETAIL SHOULD BE USED WHEN DIFFERENCES ARE NOTED.

Construction specifications

Minor deviations from the following construction specifications are acceptable as long as performance oriented specifications are maintained. The performance oriented specification for filter berms is that sediment is not observed on the down gradient side of the berm. If sediment is observed on the down gradient side of the berm, the filter berm should be maintained or re-installed.

Slash filter berms

See Figure FB-1 for installation details.

1. Place material cleared from the site across the slope or swale. Material with a diameter larger than 6 inches should not be used.
2. Cut up brush if necessary and compact to avoid large voids within the barrier.
3. The barrier mound should be at least 2 feet high and 5 feet wide at its base.
4. It is recommended, but not required, that the mound be covered with a filter fabric barrier to hold the material in place and increase sediment barrier efficiency. If using a filter fabric cover, bury the edge in a trench 4 inches deep and 6 inches wide on the drainage side of the barrier. This is done to secure the fabric and create a barrier to sediment while allowing stormwater to pass through the water-permeable filter fabric. The fabric should be extended just over the peak of the brush mound and secured on the down-slope edge of the fabric by fastening it to twine or small diameter rope that is staked securely.

Rock filter berms

See Figure FB-2 for installation details.

1. Place filter berm along a level contour. Use well-graded, angular site gravel or crushed rock of medium to large diameter with larger rocks on the bottom.
2. If desired, cover with geotextile fabric or wire screen (especially if concentrated flows are expected) to help keep berm in tack. Anchor fabric or wire by placing under the berm or use stakes.
3. Trenching is not required.
4. Berms should be spaced according to the steepness of the slope, with berms spaced closer together as the slope increases.

Maintenance considerations

The frequency of inspections should be in accordance with the SWMP or PCSWMP. If channels form through void spaces in the barrier, the barrier should be reconstructed to eliminate the channels. Ensure that sediment has not built up and that no damage has been done by vehicles. Regular inspection should indicate the frequency of sediment removal needed. Accumulated sediment should be removed from the uphill side of the barrier when sediment height reaches between 1/3 and 1/2 the height of the barrier. Sediment should be disposed of and the filter material and/or fabric should be replaced if necessary. It is important that repairs be performed at the first sign of deterioration to ensure that the berm is functioning properly.

Removal/Abandonment

Filter berms may be removed after uphill drainage areas are stabilized. Rock and brush may also be left in place only if it does not cause any landscaping problems. Remove all manmade materials (wire, fabric, and/or stakes).

References

1. Environmental Protection Agency (EPA), National Pollutant Discharge Elimination System (NPDES). Construction Site Storm Water Runoff Control. Washington, D.C., February, 2003. <http://cfpub.epa.gov/npdes/stormwater/menuofbmps/con_site.cfm>
2. Horizon Environmental Services, Inc, Guidance Document Reasonable and Prudent Practices for Stabilization (RAPPS) of Oil and Gas Construction Sites. April 2004.

Figure FB-1
Slash Filter Berm Installation

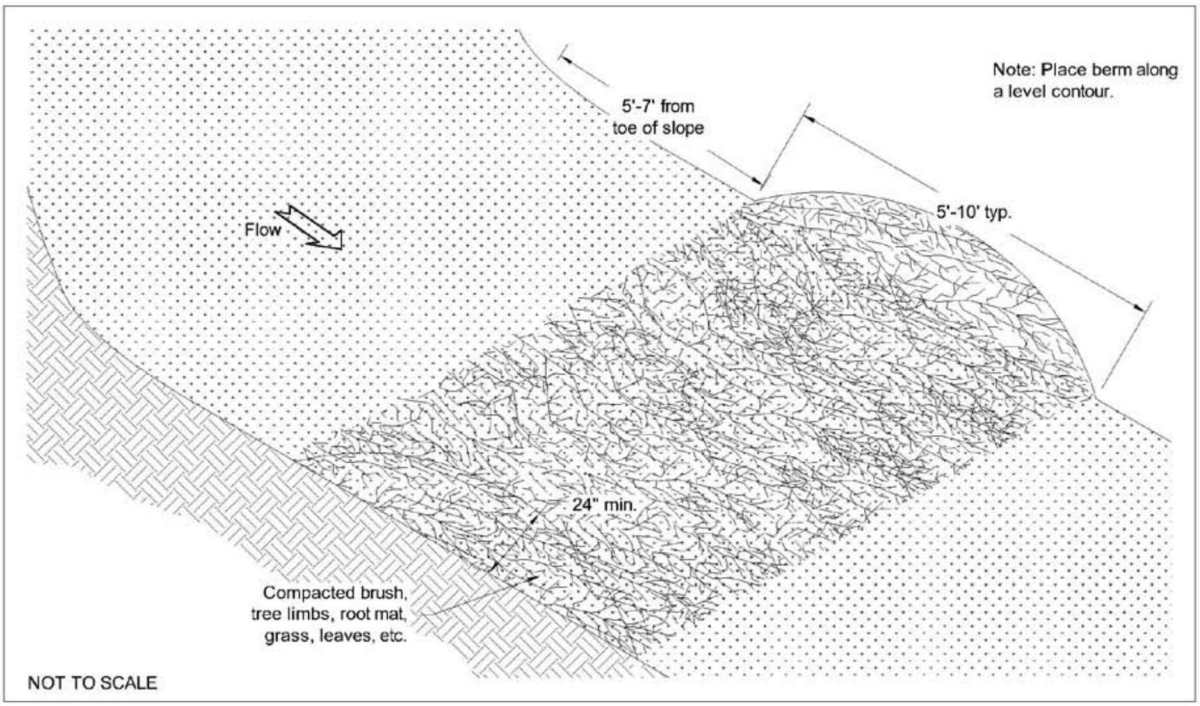

Figure FB-2
Rock Filter Berm Installation

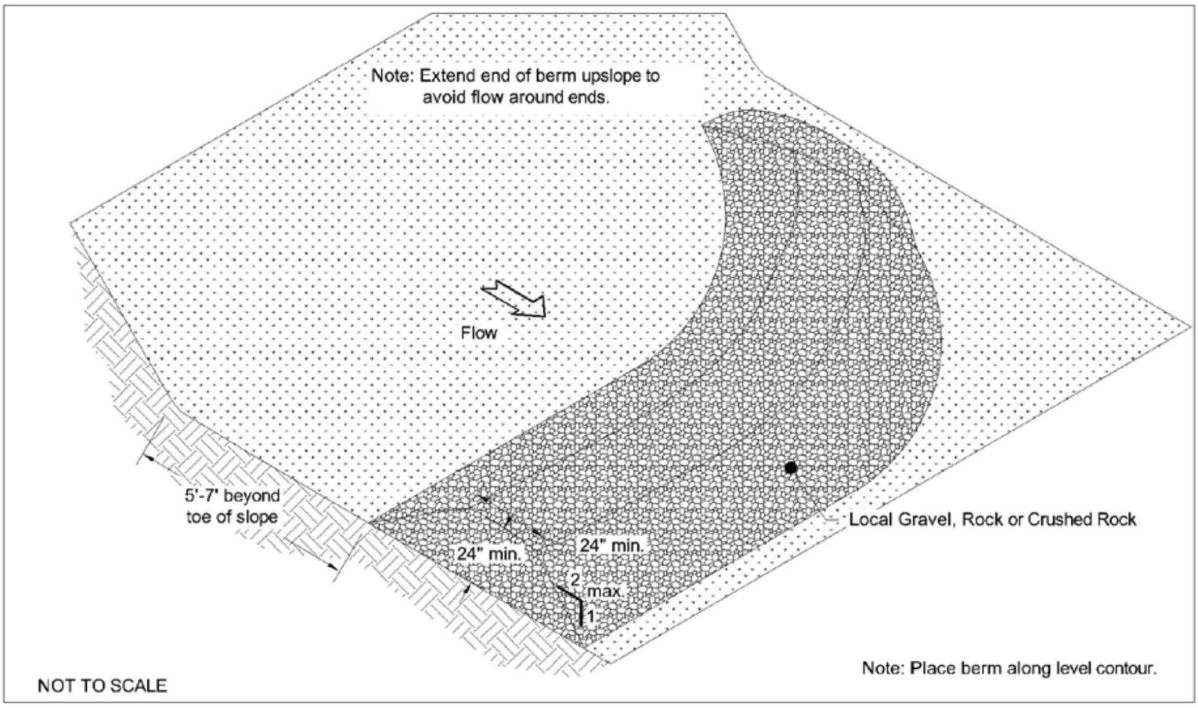

DANDY CURB BAG®
CURB AND GUTTER INLET/GRATE PROTECTION SYSTEM
GUIDE SPECIFICATION

PRODUCT:

DANDY CURB BAG®

MANUFACTURER:

Dandy Products, Inc.
P.O. Box 1980
Westerville, Ohio 43086
Phone: 800-591-2284
Fax: 740-881-2791
E-mail dlc@dandyproducts.com
Web www.dandyproducts.com

1.0 **Description:**

1.1 Work covered under this item consists of installing a Dandy Curb Bag® curb and gutter inlet protection system. The purpose is to keep silt, sediment and construction debris out of the storm water system.

2.0 **Material:**

2.1 The Dandy Curb Bag® curb and gutter inlet protection unit shall be a **sewn in the U.S.A.** geotextile fabric unit enclosing a porous structure in the form of a cylindrical tube placed in front of and extending beyond the inlet opening on both sides and have a geotextile fabric envelope fitted to the individual grate(s)on the street side of the sewn unit for grate(s) to be inserted and to completely enclose the grate(s).

2.2 The Dandy Curb Bag® shall have lifting devices to allow manual inspection of the storm water system.

2.3 The Dandy Curb Bag® unit shall utilize an orange monofilament fabric that is manufactured in the U.S.A. with the following characteristics:

PROPERTY	TEST METHOD	UNITS	TEST RESULTS
Grab Tensile Strength	ASTM D 4632	lbs	450 x 300
Grab Tensile Elongation	ASTM D 4632	%	40 x 25
Puncture Strength	ASTM D 4833	lbs	130
Mullen Burst Strength	ASTM D 3786	psi	600
Trapezoid Tear Strength	ASTM D 4533	lbs	165 x 150
% Open Area (POA)	COE - 22125-86	%	28
Apparent Opening Size	ASTM D 4751	US Std Sieve	30
Permittivity	ASTM D 4491	sec^{1}	3.5

Permeability	ASTM 4491	cm/sec	0.25
Water Flow Rate	ASTM 4491	gal/min/ft^2	250
Ultraviolet Resistance	ASTM D 4355	%	70
Color			Orange[1]

[1]The color orange is a trademark of Dandy Products, Inc.
The property values listed above are effective October 2010 and are subject to change without notice.

3.0 **Installation:**

3.1 Place the empty Dandy Curb Bag® unit over the grate as the grate stands on end.

3.2 *For oil and sediment model; to install or replace absorbent, place absorbent pillow in pouch, on the bottom (below-grade side) of the unit.*

3.3 Tuck the enclosure flap inside to completely enclose the grate.

3.4 Holding the lifting devices, being careful not to damage the sewn fabric unit, insert the grate into its frame, street side edge first, then lower back edge with cylindrical tube into place. The cylindrical tube should be partially blocking the curb hood opening when installed properly.

4.0 **Maintenance:**

4.1 The contractor shall remove all accumulated sediment and debris from surface and vicinity of unit after each rain event or as directed by engineer/inspector. Dispose of unit no longer in use at an appropriate recycling or solid waste facility.

4.2 *For oil and sediment model; remove and replace absorbent when near saturation.*

5.0 **Method of Measurement:**

5.1 The quantity to be paid is for the actual number of Dandy Curb Bag® inlet protection units installed

6.0 **Basis of payment:**

6.1 The unit price shall include labor, equipment, and materials necessary to complete the work and maintain the Dandy Curb Bag® inlet protection units.

6.2 Payment for the completed work will be made at the contract prices for:

ITEM	UNIT	DESCRIPTION
Dandy Curb Bag®	EA	Curb Inlet Protection Unit (#_____Inlet)

Construction Phasing/Sequencing (CP) SM-1

Description

Effective construction site management to minimize erosion and sediment transport includes attention to construction phasing, scheduling, and sequencing of land disturbing activities. On most construction projects, erosion and sediment controls will need to be adjusted as the project progresses and should be documented in the SWMP.

Photograph CP-1. Construction phasing to avoid disturbing the entire area at one time. Photo courtesy of WWE.

Construction phasing refers to disturbing only part of a site at a time to limit the potential for erosion from dormant parts of a site. Grading activities and construction are completed and soils are effectively stabilized on one part of a site before grading and construction begins on another portion of the site.

Construction sequencing or scheduling refers to a specified work schedule that coordinates the timing of land disturbing activities and the installation of erosion and sediment control practices.

Appropriate Uses

All construction projects can benefit from upfront planning to phase and sequence construction activities to minimize the extent and duration of disturbance. Larger projects and linear construction projects may benefit most from construction sequencing or phasing, but even small projects can benefit from construction sequencing that minimizes the duration of disturbance.

Typically, erosion and sediment controls needed at a site will change as a site progresses through the major phases of construction. Erosion and sediment control practices corresponding to each phase of construction must be documented in the SWMP.

Design and Installation

BMPs appropriate to the major phases of development should be identified on construction drawings. In some cases, it will be necessary to provide several drawings showing construction-phase BMPs placed according to stages of development (e.g., clearing and grading, utility installation, active construction, final stabilization). Some municipalities in the Denver area set maximum sizes for disturbed area associated with phases of a construction project. Additionally, requirements for phased construction drawings vary among local governments within the UDFCD boundary. Some local governments require separate erosion and sediment control drawings for initial BMPs, interim conditions (in active construction), and final stabilization.

Construction Scheduling	
Functions	
Erosion Control	Moderate
Sediment Control	Moderate
Site/Material Management	Yes

Typical construction phasing BMPs include:

- Limit the amount of disturbed area at any given time on a site to the extent practical. For example, a 100-acre subdivision might be constructed in five phases of 20 acres each.
- If there is carryover of stockpiled material from one phase to the next, position carryover material in a location easily accessible for the pending phase that will not require disturbance of stabilized areas to access the stockpile. Particularly with regard to efforts to balance cut and fill at a site, careful planning for location of stockpiles is important.

Typical construction sequencing BMPs include:

- Sequence construction activities to minimize duration of soil disturbance and exposure. For example, when multiple utilities will occupy the same trench, schedule installation so that the trench does not have to be closed and opened multiple times.
- Schedule site stabilization activities (e.g., landscaping, seeding and mulching, installation of erosion control blankets) as soon as feasible following grading.
- Install initial erosion and sediment control practices before construction begins. Promptly install additional BMPs for inlet protection, stabilization, etc., as construction activities are completed.

Table CP-1 provides typical sequencing of construction activities and associated BMPs.

Maintenance and Removal

When the construction schedule is altered, erosion and sediment control measures in the SWMP and construction drawings should be appropriately adjusted to reflect actual "on the ground" conditions at the construction site. Be aware that changes in construction schedules can have significant implications for site stabilization, particularly with regard to establishment of vegetative cover.

Table CP-1. Typical Phased BMP Installation for Construction Projects

Project Phase	BMPs
Pre-disturbance, Site Access	▪ Install sediment controls downgradient of access point (on paved streets this may consist of inlet protection). ▪ Establish vehicle tracking control at entrances to paved streets. Fence as needed. ▪ Use construction fencing to define the boundaries of the project and limit access to areas of the site that are not to be disturbed. **Note: it may be necessary to protect inlets in the general vicinity of the site, even if not downgradient, if there is a possibility that sediment tracked from the site could contribute to the inlets.**
Site Clearing and Grubbing	▪ Install perimeter controls as needed on downgradient perimeter of site (silt fence, wattles, etc). ▪ Limit disturbance to those areas planned for disturbance and protect undisturbed areas within the site (construction fence, flagging, etc). ▪ Preserve vegetative buffer at site perimeter. ▪ Create stabilized staging area. ▪ Locate portable toilets on flat surfaces away from drainage paths. Stake in areas susceptible to high winds. ▪ Construct concrete washout area and provide signage. ▪ Establish waste disposal areas. ▪ Install sediment basins. ▪ Create dirt perimeter berms and/or brush barriers during grubbing and clearing. ▪ Separate and stockpile topsoil, leave roughened and/or cover. ▪ Protect stockpiles with perimeter control BMPs. Stockpiles should be located away from drainage paths and should be accessed from the upgradient side so that perimeter controls can remain in place on the downgradient side. Use erosion control blankets, temporary seeding, and/or mulch for stockpiles that will be inactive for an extended period. ▪ Leave disturbed area of site in a roughened condition to limit erosion. Consider temporary revegetation for areas of the site that have been disturbed but that will be inactive for an extended period. ▪ Water to minimize dust but not to the point that watering creates runoff.

Project Phase	BMPs
Utility And Infrastructure Installation	**In Addition to the Above BMPs:** ▪ Close trench as soon as possible (generally at the end of the day). ▪ Use rough-cut street control or apply road base for streets that will not be promptly paved. ▪ Provide inlet protection as streets are paved and inlets are constructed. ▪ Protect and repair BMPs, as necessary. ▪ Perform street sweeping as needed.
Building Construction	**In Addition to the Above BMPs:** ▪ Implement materials management and good housekeeping practices for home building activities. ▪ Use perimeter controls for temporary stockpiles from foundation excavations. ▪ For lots adjacent to streets, lot-line perimeter controls may be necessary at the back of curb.
Final Grading	**In Addition to the Above BMPs:** ▪ Remove excess or waste materials. ▪ Remove stored materials.
Final Stabilization	**In Addition to the Above BMPs:** ▪ Seed and mulch/tackify. ▪ Seed and install blankets on steep slopes. ▪ Remove all temporary BMPs when site has reached final stabilization.

Protection of Existing Vegetation (PV) SM-2

Description

Protection of existing vegetation on a construction site can be accomplished through installation of a construction fence around the area requiring protection. In cases where upgradient areas are disturbed, it may also be necessary to install perimeter controls to minimize sediment loading to sensitive areas such as wetlands. Existing vegetation may be designated for protection to maintain a stable surface cover as part of construction phasing, or vegetation may be protected in areas designated to remain in natural condition under post-development conditions (e.g., wetlands, mature trees, riparian areas, open space).

Photograph PV-1. Protection of existing vegetation and a sensitive area. Photo courtesy of CDOT.

Appropriate Uses

Existing vegetation should be preserved for the maximum practical duration on a construction site through the use of effective construction phasing. Preserving vegetation helps to minimize erosion and can reduce revegetation costs following construction.

Protection of wetland areas is required under the Clean Water Act, unless a permit has been obtained from the U.S. Army Corps of Engineers (USACE) allowing impacts in limited areas.

If trees are to be protected as part of post-development landscaping, care must be taken to avoid several types of damage, some of which may not be apparent at the time of injury. Potential sources of injury include soil compaction during grading or due to construction traffic, direct equipment-related injury such as bark removal, branch breakage, surface grading and trenching, and soil cut and fill. In order to minimize injuries that may lead to immediate or later death of the tree, tree protection zones should be developed during site design, implemented at the beginning of a construction project, as well as continued during active construction.

Design and Installation

General

Once an area has been designated as a preservation area, there should be no construction activity allowed within a set distance of the area. Clearly mark the area with construction fencing. Do not allow stockpiles, equipment, trailers or parking within the protected area. Guidelines to protect various types of existing vegetation follow.

Protection of Existing Vegetation	
Functions	
Erosion Control	Yes
Sediment Control	Moderate
Site/Material Management	Yes

Surface Cover During Phased Construction

Install construction fencing or other perimeter controls around areas to be protected from clearing and grading as part of construction phasing.

Maintaining surface cover on steep slopes for the maximum practical duration during construction is recommended.

Open Space Preservation

Where natural open space areas will be preserved as part of a development, it is important to install construction fencing around these areas to protect them from compaction. This is particularly important when areas with soils with high infiltration rates are preserved as part of LID designs. Preserved open space areas should not be used for staging and equipment storage.

Wetlands and Riparian Areas

Install a construction fence around the perimeter of the wetland or riparian (streamside vegetation) area to prevent access by equipment. In areas downgradient of disturbed areas, install a perimeter control such as silt fence, sediment control logs, or similar measure to minimize sediment loading to the wetland.

Tree Protection[1]

- Before beginning construction operations, establish a tree protection zone around trees to be preserved by installing construction fences. Allow enough space from the trunk to protect the root zone from soil compaction and mechanical damage, and the branches from mechanical damage (see Table PV-1). If low branches will be kept, place the fence outside of the drip line. Where this is not possible, place fencing as far away from the trunk as possible. In order to maintain a healthy tree, be aware that about 60 percent of the tree's root zone extends beyond the drip line.

Table PV-1
Guidelines for Determining the Tree Protection Zone
(Source: Matheny and Clark, 1998; as cited in GreenCO and WWE 2008)

	Distance from Trunk (ft) per inch of DBH		
Species Tolerance to Damage	*Young*	*Mature*	*Over mature*
Good	0.5'	0.75'	1.0'
Moderate	0.75'	1.0'	1.25'
Poor	1.0'	1.25'	1.5'
Notes: DBH = diameter at breast height (4.5 ft above grade); Young = <20% of life expectancy; Mature = 20%-80% of life expectancy; Over mature =>80% of life expectancy			

- Most tree roots grow within the top 12 to 18 inches of soil. Grade changes within the tree protection zone should be avoided where possible because seemingly minor grade changes can either smother

[1] Tree Protection guidelines adapted from GreenCO and WWE (2008). *Green Industry Best Management Practices (BMPs) for the Conservation and Protection of Water Resources in Colorado: Moving Toward Sustainability, Third Release.* See www.greenco.org for more detailed guidance on tree preservation.

roots (in fill situations) or damage roots (in cut situations). Consider small walls where needed to avoid grade changes in the tree protection zone.

- Place and maintain a layer of mulch 4 to 6-inch thick from the tree trunk to the fencing, keeping a 6-inch space between the mulch and the trunk. Mulch helps to preserve moisture and decrease soil compaction if construction traffic is unavoidable. When planting operations are completed, the mulch may be reused throughout planting areas.

- Limit access, if needed at all, and appoint one route as the main entrance and exit to the tree protection zone. Within the tree protection zone, do not allow any equipment to be stored, chemicals to be dumped, or construction activities to take place except fine grading, irrigation system installation, and planting operations. These activities should be conducted in consultation with a landscaping professional, following Green Industry BMPs.

- Be aware that soil compaction can cause extreme damage to tree health that may appear gradually over a period of years. Soil compaction is easier to prevent than repair.

Maintenance and Removal

Repair or replace damaged or displaced fencing or other protective barriers around the vegetated area.

If damage occurs to a tree, consult an arborist for guidance on how to care for the tree. If a tree in a designated preservation area is damaged beyond repair, remove and replace with a 2-inch diameter tree of the same or similar species.

Construction equipment must not enter a wetland area, except as permitted by the U.S. Army Corps of Engineers (USACE). Inadvertent placement of fill in a wetland is a 404 permit violation and will require notification of the USACE.

If damage to vegetation occurs in a protected area, reseed the area with the same or similar species, following the recommendations in the USDCM *Revegetation* chapter.

Construction Fence (CF) SM-3

Description

A construction fence restricts site access to designated entrances and exits, delineates construction site boundaries, and keeps construction out of sensitive areas such as natural areas to be preserved as open space, wetlands and riparian areas.

Photograph CF-1. A construction fence helps delineate areas where existing vegetation is being protected. Photo courtesy of Douglas County.

Appropriate Uses

A construction fence can be used to delineate the site perimeter and locations within the site where access is restricted to protect natural resources such as wetlands, waterbodies, trees, and other natural areas of the site that should not be disturbed.

If natural resource protection is an objective, then the construction fencing should be used in combination with other perimeter control BMPs such as silt fence, sediment control logs or similar measures.

Design and Installation

Construction fencing may be chain link or plastic mesh and should be installed following manufacturer's recommendations. See Detail CF-1 for typical installations.

Do not place construction fencing in areas within work limits of machinery.

Maintenance and Removal

- Inspect fences for damage; repair or replace as necessary.
- Fencing should be tight and any areas with slumping or fallen posts should be reinstalled.
- Fencing should be removed once construction is complete.

Construction Fence	
Functions	
Erosion Control	No
Sediment Control	No
Site/Material Management	Yes